Remeha
AVANTA RANGE

Installation & Service Manual

Remeha Avanta Range

24c | 28c | 35c | 39c | 18s | 24s | 30s

benchmark
COLLECTIVE MARK
THE MARK OF QUALITY FOR THE INSTALLATION, COMMISSIONING AND SERVICING OF DOMESTIC HEATING AND HOT WATER SYSTEMS

spares & parts online IBASIS.CO.UK

Benchmark places responsibilities on both manufacturers and installers. The purpose is to ensure that customers are provided with the correct equipment for their needs, that it is installed, commissioned and serviced in accordance with the manufacturer's instructions by competent persons and that it meets the requirements of the appropriate Building Regulations. The Benchmark Checklist can be used to demonstrate compliance with Building Regulations and should be provided to the customer for future reference. Installers are required to carry out installation, commissioning and servicing work in accordance with the Benchmark Code of Practice which is available from the Heating and Hotwater Industry Council who manage and promote the Scheme.

Visit www.centralheating.co.uk for more information.

CONTENTS

INTRODUCTION **4**

1 SAFETY **5**
- 1.1 General safety 5
- 1.2 Safety during assembly and installation 5
- 1.3 Safety during installation, inspection and maintenance 5

2 INSTALLATION **7**
- 2.1 Scope of delivery 7
- 2.2 Mounting the boiler 7
  - 2.2.1 Clearance requirements 7
  - 2.2.2 Dimensions and connection points. 8
  - 2.2.3 Mounting the Remeha Avanta Plus 10
- 2.3 Water-side connections 10
  - 2.3.1 Water flow 10
  - 2.3.2 Circulation pumps 11
  - 2.3.3 Additional guidelines for the domestic and CH water 11
  - 2.3.4 Water treatment 11
  - 2.3.5 Safety valve discharge 12
  - 2.3.6 Expansion vessel 13
  - 2.3.7 Connecting DHW pipes 13
  - 2.3.8 Connecting the 'CH return' 14
  - 2.3.9 Connecting 'CH flow' 14
  - 2.3.10 Connecting condensate drain 15
  - 2.3.11 Connecting under floor heating 15
- 2.4 Gas-side connections 15
  - 2.4.1 Additional guidelines for gas connections 15
  - 2.4.2 Adjusting boiler to other gas-type 16
  - 2.4.3 Connecting the gas supply 16
- 2.5 Flue terminal and air supply connections 16
  - 2.5.1 Flue terminal positions 16
  - 2.5.2 Room sealed flue 17
  - 2.5.3 Connecting the flue terminal and air supply 18
- 2.6 Electrical connection 19
  - 2.6.1 The control unit 19
- 2.7 Connecting external controls 20
  - 2.7.1 On/off control – room temperature (volt free switching) 22
  - 2.7.2 Time control using an internal or external 230 V clock 22
  - 2.7.3 Connecting a 230 V time clock in combination with a modulating room control 23
  - 2.7.4 Modulating control – room or outside compensation 23
  - 2.7.5 Connecting an outside temperature sensor 24
  - 2.7.6 Connecting the DHW sensor/thermostat 25
  - 2.7.7 Connecting a frost thermostat 25
  - 2.7.8 Connecting an external interlock 26
  - 2.7.9 Connecting remote alarm, boiler run indication and external pump relay 26
  - 2.7.10 Connecting a PC/PDA 26

2.9 Commissioning 28
2.9.1 Control Panel 28
2.9.2 Additional guidelines for commissioning 28
2.9.3 Putting the boiler into operation 28
2.9.4 Normal start-up procedure 34
2.9.5 Error during the start-up procedure 35
2.9.6 Read out settings 36
2.9.7 Adjust the boiler according to the system 36
2.9.8 Changing the parameters at service level (with access code) 37
2.9.9 Changing the maximum output (Hi) for CH operation 40
2.9.10 Restore factory settings 42
2.10 Putting the boiler out of operation 42
2.10.1 Boiler with frost protection, during longer periods of non-use 42
2.10.2 Boiler without frost protection, during longer periods of non-use 42

3 INSPECTION AND MAINTENANCE 43
3.1 Inspection 43
3.1.1 Checking the water pressure 44
3.1.2 Checking the flue pipes and air supply pipes for leaks 44
3.1.3 Checking the condensate siphon 45
3.1.4 Checking the ignition electrode 45
3.2 Maintenance 47

4 ERRORS 52
4.1 General 52
4.2 Error codes 52
4.3 Control stop or lock-out 54
4.4 Error memory 55
4.4.1 Error read outs 55
4.4.2 Deleting errors 55

5 SERVICE PARTS 56
5.1 General 56

6 EC declaration 59

7 REGULATIONS 60
7.1 EC regulations 60
7.2 Remeha factory test 60
7.3 Additional guidelines 60

8 TECHNICAL SPECIFICATIONS and working principle 61
8.1 Technical data 61
8.2 The boiler components 63
8.3 Working principle 63
8.3.1 Regulating 64
8.3.2 Advanced boiler control (‘abc®’-control) 64
8.3.3 Regulating the water temperature 64
8.3.4 Low flow / water protection 65
8.3.5 High Limit temperature protection 65

9 efficiency data and gas efficiency labels 66
9.1 Annual efficiency 66
9.2 Water-side efficiency 66

INTRODUCTION

The Remeha Avanta Plus is a series of high-efficiency fully condensing central heating boilers, for wall mounting, available in the following types:

- Remeha Avanta Plus 24c, 28c, 35c and 39c - with integrated domestic hot water system (**C**ombi-type)
- Remeha Avanta Plus 18s, 24s, 30s - without integrated domestic hot water system (**S**ystem-type)

These technical instructions contain useful and important information for the correct installation, operation and maintenance of the Remeha Avanta Plus combi and system boilers.

fig. 01 Remeha Avanta Plus

112952.LT.GB.W7H.001

Read these instructions carefully before putting the boiler into operation, familiarise yourself with their control functions and operation, strictly observing the instructions given. Failure to do so may invalidate warranty or prevent the boiler from operating correctly.

The installation, commissioning, inspection and servicing of the boiler must be carried out by a competent registered engineer who holds valid ACS certification and in accordance with current gas safety (installation and use) regulations, the building regulations and all other relevant codes of practice.
All electrical work must be carried out by a competent engineer and to be installed in accordance with the current IEE regulations.

On commissioning the certificate in the Benchmark Checklist within the Installation + Service manual must be completed and left on site with a copy send on to Broag Ltd for registration purposes.

If you have any questions, require an engineer to call on site, or if you need more information about specific subjects relating to this boiler, or it's installation please do not hesitate to contact our technical help line 0118 978 3434.

When contacting Broag with a problem on the boiler, please have available the boiler type, Serial No (located on the bottom of the casing), and the symptoms or fault code (the fault code is a series of flashing red digits in the display panel).

The data published in these technical instructions is based on the latest information (at date of publication) and may be subject to revisions.
We reserve the right to continuous development in both design and manufacture, therefore any changes to the materials or technology employed may not be retrospective nor may we be obliged to adjust earlier supplies accordingly.

1 SAFETY

1.1 General safety

The following pictograms are used in this Installation and Service manual to specifically draw certain points to your attention:

Tip Useful tip or practical advice.

Indication Important instruction in carrying out a particular operation.

Warning Possible danger of personal injury or material damage to the regulator, building or environment.

Danger Serious personal injury can occur because of risk of electric shocks.

1.2 Safety during assembly and installation

Observe the appropriate safety measures, as given in these instructions.

Can you smell gas? What to do:
- do not smoke and do not create any flame or sparks;
- do not use any electric switches;
- turn off the gas tap;
- open windows and doors;
- trace possible leaks and seal them.

Warning! If the leak is before the gas meter, alert your gas supplier, TRANSCO, tel. 0800 111 999

Can you smell smoke or flue gasses? What to do:
- isolate power supply.
- open windows and doors;
- trace possible leaks and seal them.

1.3 Safety during installation, inspection and maintenance

Under the current Gas Safety (Installation & Use) Regulations, the Remeha Avanta Plus, in common with all gas appliances, must be installed by a competent person in accordance with that regulation.
Statutory regulations in any country, cannot be overridden by any of the notes or instructions from the manufacturer. Compliance with National Standards does not provide any degree of immunity from legal obligations. In the UK, the installation must be in accordance with the national and local norms and requirements.

For any issues or circumstances not addressed within these instructions, please call our After Sales Department
0118 9743070

The Remeha Avanta Plus (combi and system) is a WRAS (Water regulations) approved product.

fig. 02 WRAS logo

LT.AL.W7H.000.074

Remeha Avanta Plus (combi and system) - PIN: 0063BQ3009

Gas Council numbers:
Remeha Avanta Plus 24c: 41-288-01
Remeha Avanta Plus 28c: 47-673-02
Remeha Avanta Plus 35c: 47-673-03
Remeha Avanta Plus 39c: 47-673-04
Remeha Avanta Plus 18s: 41-288-11
Remeha Avanta Plus 24s: 41-288-05
Remeha Avanta Plus 30s: 41-288-12

Classification type for evacuation of the combustion products; according EN 483: *see Par. 8.1.*

Health and safety information

- The weight of the Avanta Plus system and combi boilers exceed the maximum lift weight for one person. Please ensure all necessary care is taken when lifting the boiler on to the wall mounting plate.
- All sealants and gaskets are free from harmful products. On first firing the boiler, a smell from the sealants and gaskets may be present and should cease after a short period.

2 INSTALLATION

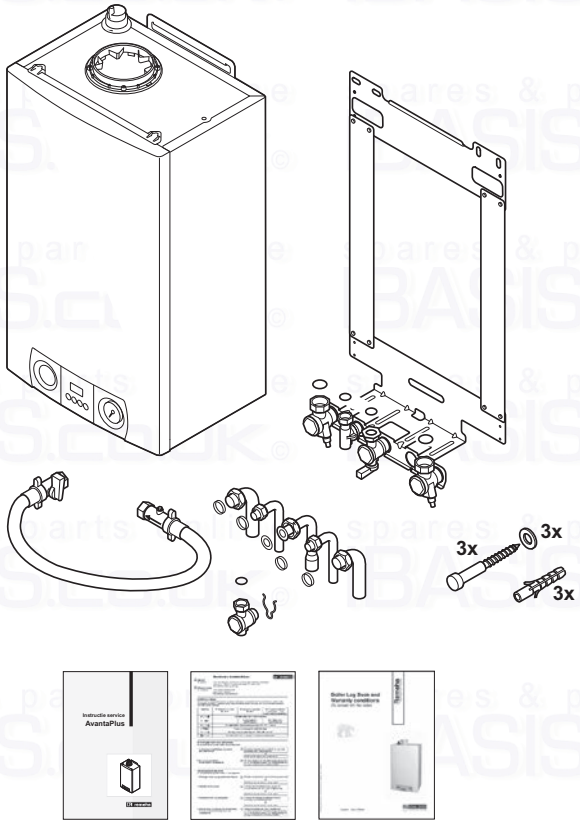

fig. 03 Scope of delivery

112952.LT.GB.W7H.011

2.1 Scope of delivery

The standard delivery of the Remeha Avanta Plus boiler includes:

- the boiler (including pressure gauge and safety valve);
- mounting plate (including isolation valve set and washers);
- nylon plugs and screws for fixing mounting plate;
- copper tails 15/22 mm;
- mounting template;
- filling loop;
- Warranty Leaflet (The terms and conditions of the warranty are included in the warranty leaflet, on installation of the boiler please fill in the registration card and return to Broag-Remeha);
- Installation and Service manual and Users guide.

This Installation and Service manual deals with the standard supplied boiler only. For the installation or assembly of any optional accessories supplied with the boiler, such as stand off frame, pipework kits, cover plate, control kits, etc, please refer to the Assembly Instructions supplied with these accessories.

2.2 Mounting the boiler

Packed in the box with the Remeha Avanta Plus box is this Installation and Service manual. Read instructions and remarks carefully. This section includes the guidelines and instructions for the connection of gas, water, electricity, safety devices, the regulator, control unit, flue discharge and air supply.

2.2.1 Clearance requirements

The gas and water connections are located on the bottom of the boiler whilst the air in and flue gas outlet is located on the top of the boiler. The boiler is supplied as standard with pipework tails to allow connections facing downwards.
Optional stand off frame and pipework kits are available to enable the pipework to run upwards behind the boiler if required. For installation, servicing and inspection min. 600 mm in front of the boiler is required. If this free space is obtained by opening a door or removing a panel, the boiler may be installed for instance in a closed cupboard.
For ease of installation we recommend clearances of 0.5 cm at the side so that the unit is easy to open, with a free space of 25 cm under the appliance and 25 cm above the appliance, as the minimum requirement.
However once installed, it is possible to reduce these clearances to 22 cm at the top, and 5 cm at the bottom provided the boiler front panel can be removed and the isolating valves are easily accessible without the use of tools”

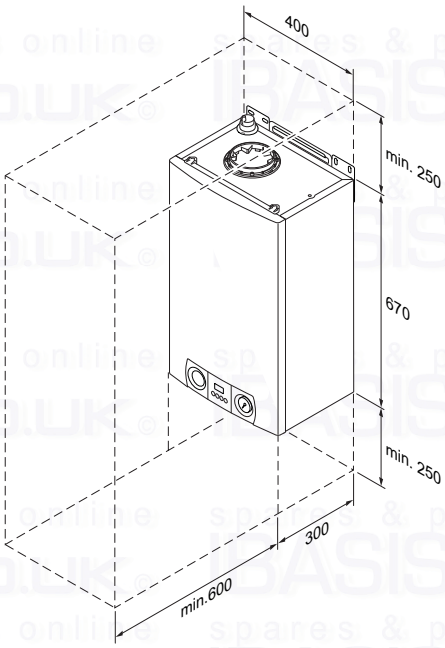

fig. 04 Clearance requirements

112952.LT.GB.W7H.003

2.2.2 Dimensions and connection points.

System type
- *Return connection Ø 22 mm*
- *Flow connection Ø 22 mm*
- *Gas connection Ø 22 mm*
- *Combustion air inlet Ø 100 mm (concentric)*
- *Flue duct Ø 60 mm (concentric)*
- *Condensate drain connection ¾" (standard overflow pipe size)*
- *Connection safety valve Ø 15 mm*

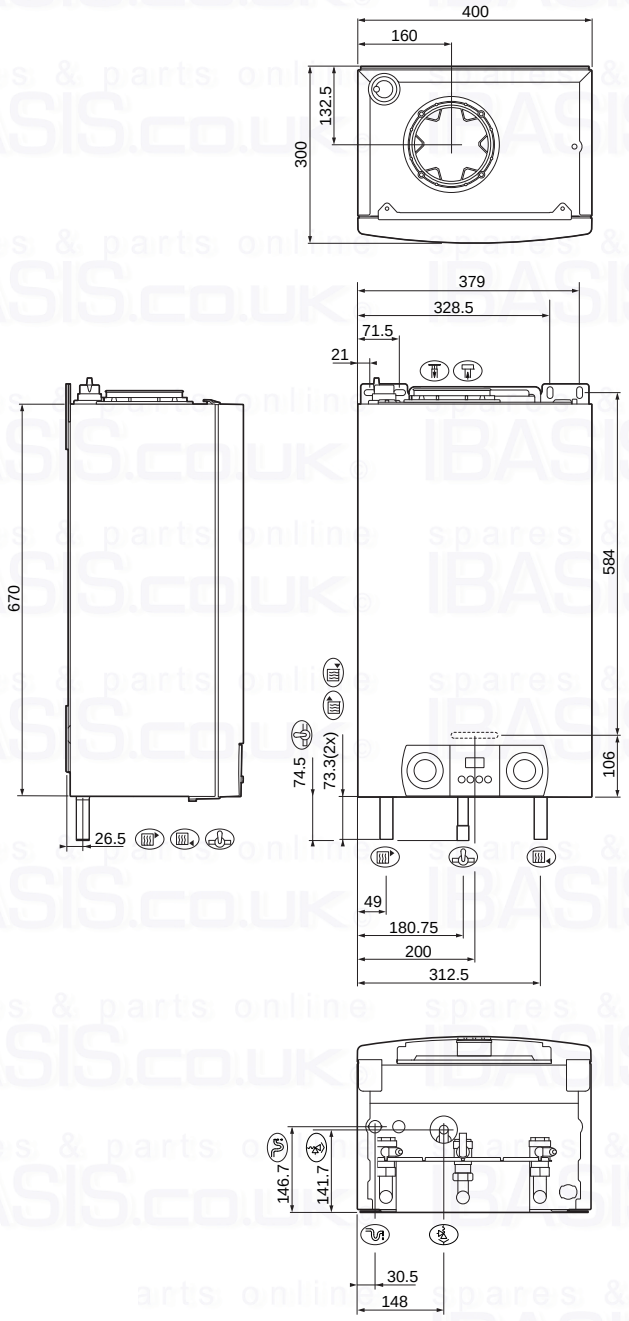

fig. 05 Dimensions and connection points of the Remeha Avanta Plus system

112952.LT.GB.W7H.005

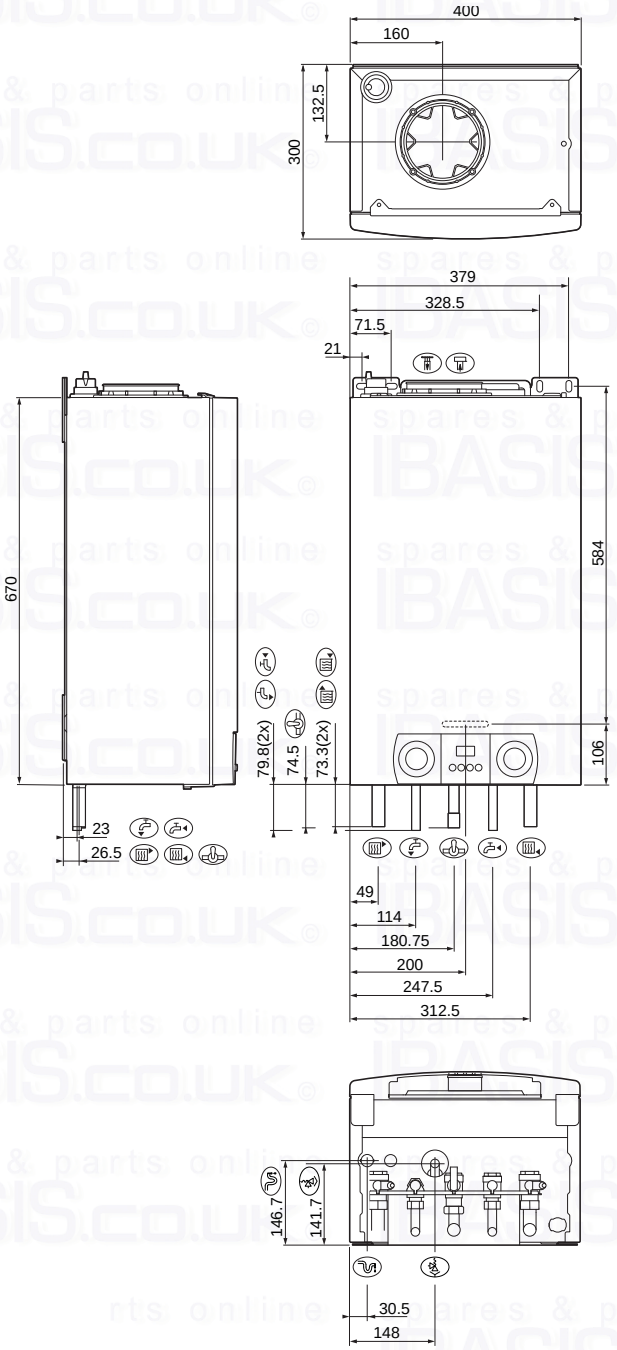

Combi type

- *Return connection Ø 22 mm*
- *Flow connection Ø 22 mm*
- *Gas connection Ø 22 mm*
- *Combustion air inlet Ø 100 mm (concentric)*
- *Flue duct Ø 60 mm (concentric)*
- *DHW inlet (cold) connection Ø 15 mm*
- *DHW outlet (hot) connection Ø 15 mm*
- *Condensate drain connection ¾" (standard overflow pipe size)*
- *Connection safety valve Ø 15 mm*

- Based on the guidelines and the required installation space, determine where to mount the Remeha Avanta Plus.
- In determining the boiler position, consider carefully the flue outlet position and any pluming consequences.

fig. 06 Dimensions and connection points of the Remeha Avanta Plus combi

112952.LT.GB.W7H.002

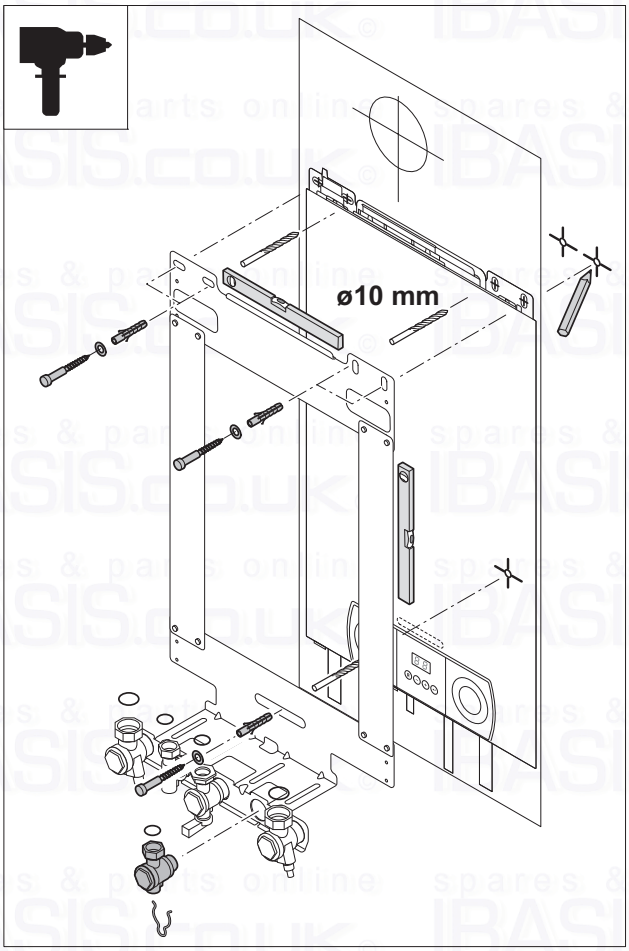

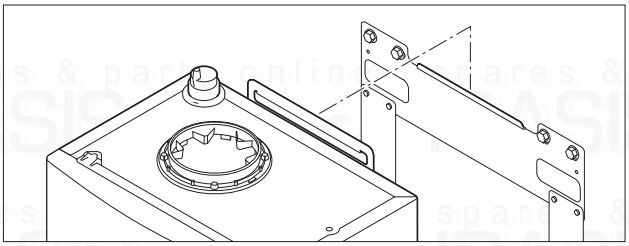

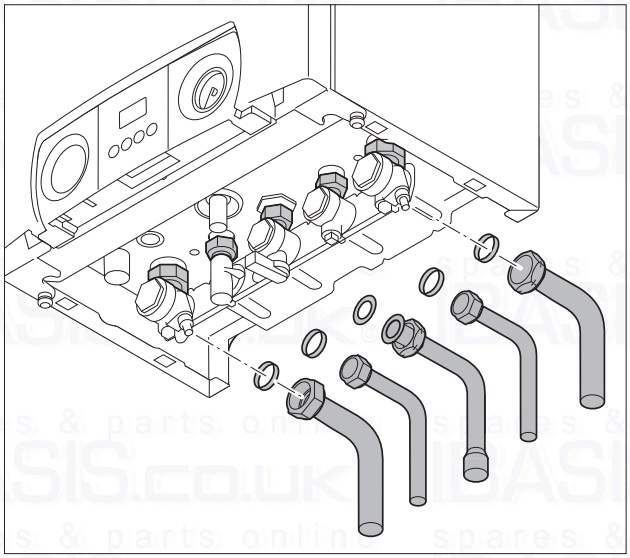

fig. 07 Mounting the Avanta Plus

112952.LT.GB.W7H.012

2.2.3 Mounting the Remeha Avanta Plus

- Remove the mounting plate and template from the box.
- Using the template determine and mark the position of the three mounting holes and center line of flue, making sure the plate is absolutely level.
- Drill the (Ø 10 mm) holes.
- Fit the (Ø 10 mm) plugs.
- Fit (Ø 8 mm) screws into the plugs.
- Check the mounting plate is level and tighten the screws.
- Fit the valve set to the mounting plate.
- Fit fibre washers on the CH valves.
- Remove boiler from the box and suspend it on mounting plate.
- Connect the valves to the boiler remembering to fit fibre washers supplied.
- Connect the supplied copper tails to the isolating valves.

⚠

- The boiler should be mounted on a suitable vertical wall which is able to support the weight of the boiler.
- The boiler should be mounted in a room which, even during severe cold weather, remains frost-free.
- If the boiler is to be installed in a timber framed building, please refer to British Gas publication: ‘Guide for Gas Installations in Timber frame Housing’, reference DM2.
- In a new installation it is possible to fit just the wall plate and valve set to enable the system pipework to be completed and tested before fitting the boiler at a later date (place fibre washers supplied in a safe place for use when fitting the boiler).

☞

- Make sure the boiler and any open connections are protected from building dust etc. during the installation.
- There must be a 3 amp fused switched spur within 1m of the boiler.
- Provision must be made for the condensate discharge.

2.3 Water-side connections

2.3.1 Water flow

An internal automatic flow by-pass is supplied in the Avanta Plus to ensure correct operation on systems fitted with TRV’s on all heat emitters. The ‘**abc®**’ control also monitors the temperature difference across the flow and return connections and the rate of temperature rise and will automatically regulate the boiler output to ensure that it remains operational for as long as possible without the need to ‘lock out’ requiring a manual re-set.

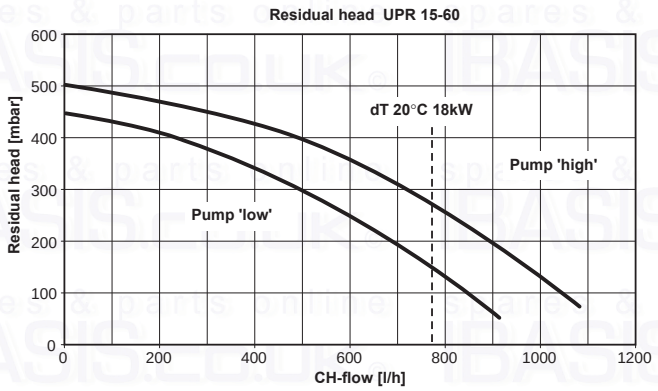

fig. 08 *Graph residual head UPR 15-60 for the CH installation with Avanta Plus 18s, 24s, 30s, 24c and 28c*

LT.AL.W7H.000.013

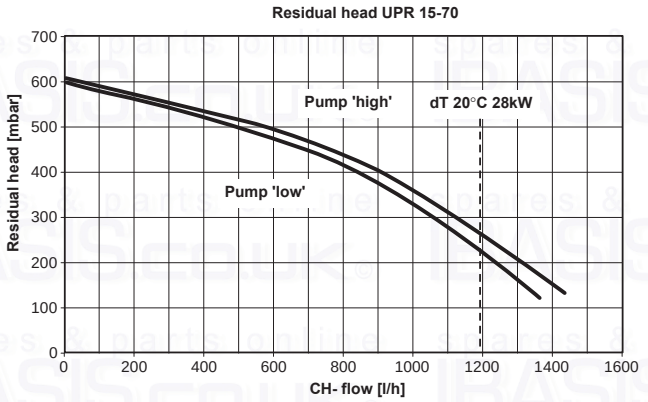

fig. 09 *Graph residual head UPR 15-70 for the CH installation with Avanta Plus 35c and 39c*

LT.AL.W7H.000.014

2.3.2 Circulation pumps

The Remeha Avanta Plus 18s, 24s, 30s, 24c and 28c are fitted with the Grundfos UPR 15-60 and the Avanta Plus 35c and 39c with the UPR 15-70, two-speed circulation pumps. The control unit ensures that when the hot-water function is active, the pump runs at 'high'. The factory setting of the pump for CH function is 'low.' If necessary, the service installer can adjust this to 'high' by switching parameter 2 1 (from 0 to 1) *see par. 2.9.8.*

2.3.3 Additional guidelines for the domestic and CH water

- The system should be filled with mains cold water (for the UK this will usually have a pH of between 7 and 8).
- Flush the pipes and radiators thoroughly to remove all fluxes and debris before connecting the boiler to the central heating system.

⚠

- The temperature of the central heating pipes and the radiators can rise to 95°C.
- Use untreated tap water only to fill the CH system.
- The pH value of the system water must be between 6 and 9
- In case inhibitors are being used, please follow the instructions given in *par. 2.3.4.*

2.3.4 Water treatment

If used correctly water treatment can improve the boilers efficiency and increase the anticipated life expectancy of the boiler. For further information a special document "Quality requirements CH water" is available from Broag.

As most systems contain a variety of metals, it is considered good practice to provide some form of water treatment in order to prevent or reduce the following:

- Metallic corrosion
- Formation of scale and sludge
- Microbiological contamination
- Chemical changes in the untreated system water

⚠

All scale deposits however small will reduce the efficiency of the boiler and should be prevented.

Suitable chemicals and their use should be discussed with a specialist water treatment company prior to carrying out any work (environmental aspects, health aspects). The specification of the system and manufacturers recommendations must be taken into account, along with the age and condition of the system. New systems should be flushed thoroughly to BS 7593(1992) to remove all traces of flux, debris, grease and metal swarf generated during installation. Care to be taken with old systems to ensure any black metallic iron oxide sludge and other corrosive residues are removed, again by power flushing, ensuring that the system is drained completely from all low points.

☞
Please ensure that the new boiler plant is not in circuit when the flushing takes place, especially if cleansing chemicals are used to assist the process.

It is important to check the inhibitor concentration after installation, system modifications, filling the system and every service in accordance with these instructions.

For the correct dosage and the suitability of inhibitors for use with our boilers and for further information on water treatment or system cleaning we advise direct contact with either of the following companies:

'F1®' manufactured by:
Fernox, Cookson Electronics
Forsyth Road
Sheerwater
Woking
Surrey GU21 5RZ
Tel No: 01483 793200
Fax No: 01483 793201
Email: admin@fernox.com
Web site: www.fernox.com

or:
Sentinal 'X100®' manufactured by
Sentinel Performance Solutions
The Heath Business & Technical Park
Runcorn
Cheshire,
WA7 4QX
Tel No: 0800 389 4670
Fax No: 0800 389 4677
Email: info.uk@sentinel-solutions.net
Web site: www.sentinel-solutions.net

2.3.5 Safety valve discharge

A pressure relief safety valve is fitted in the boiler set to the maximum operating pressure of the boiler of 3 bar.
If the pressure in the boiler becomes too high the pressure is relieved by releasing water to outside via the safety valve discharge pipe. The discharge pipe should be fitted in accordance with British Standards and must be at least 15 mm Ø.
The pipe should be positioned so that the discharge of water or steam is visible and cannot create a hazard to the occupants of the premises or damage the electric components and wiring. In addition the discharge should be located where it is unlikely to cause damage to the premises.

2.3.6 Expansion vessel

An 8 litre expansion vessel (with the vessel charge set to 1.0 bar) is fitted as standard within the boiler case and is suitable for use in a heating system with a water content up to 100 litres, operating at a flow temperature of 80°C, a maximum pressure of 3 bar and a maximum system static head of 5 metres above the boiler. If the system water content is greater than 100 litres, or the system static head above the boiler is greater than 5 m, an additional vessel must be installed in the system to allow for the increase in expansion, *see table 01.*

⚠

Install additional vessel according BS 5449, part1.

Boiler Safety Valve Setting (Bar)	**3.0**		
Vessel Charge (Bar)	0.5	1	1.5
Heating System Water Content (Litres)	**Expansion Vessel Size (Litres)**		
100	4.8	8.0	13.3
125	6.0	10.0	16.6
150	7.2	12.0	20.0
175	8.4	14.0	23.3
200	9.6	16.0	26.6
250	12.0	20.0	33.3
300	14.4	24.0	39.9
For other system volumes, multiply the system volume by the factor across:	0.048	0.080	0.133

table 01 Expansion Vessel Size

2.3.7 Connecting DHW pipes

(For combi type only)

- Fit the outlet pipe for hot water to the DHW outlet 15 mm Ø connection.
- Fit the inlet pipe for cold water to the DHW inlet 15 mm Ø connection.

☞

- The DHW pipes must be connected in accordance with current regulations.
- For plastic pipes, follow the manufacturer's instructions (for connection).

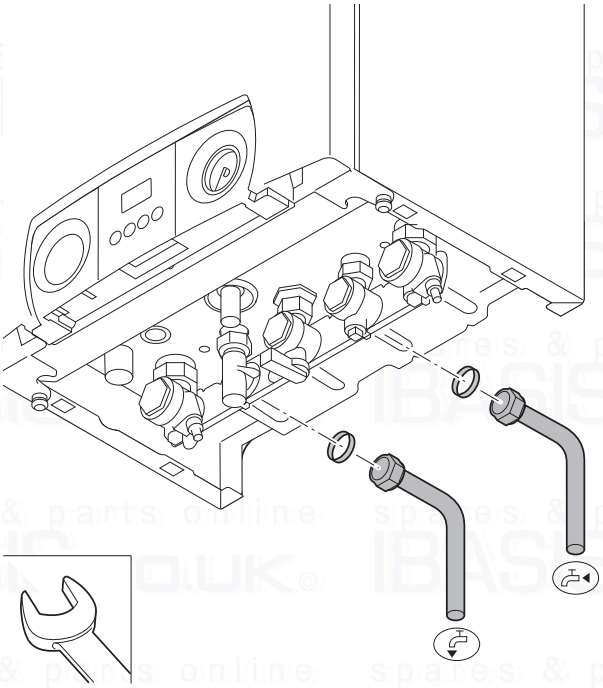

fig. 10 Connecting DHW pipes

LT.AL.W7H.000.015

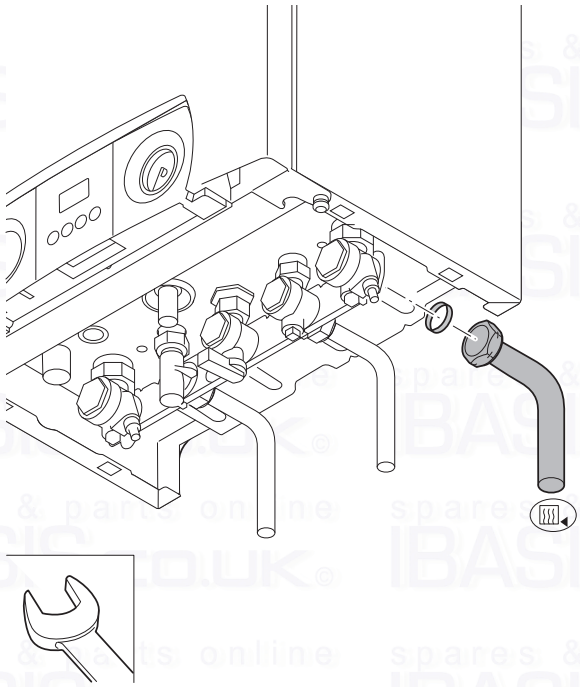

fig. 11 Connecting CH return

LT.AL.W7H.000.016

2.3.8 Connecting the 'CH return'

- Fit the inlet pipe for CH water to the 'CH return' 22 mm Ø connection.

The Remeha Avanta Plus has a drain cock built into the return isolating valve
It is considered good practice to install an air separator / dirt removal device in the return to the boiler.

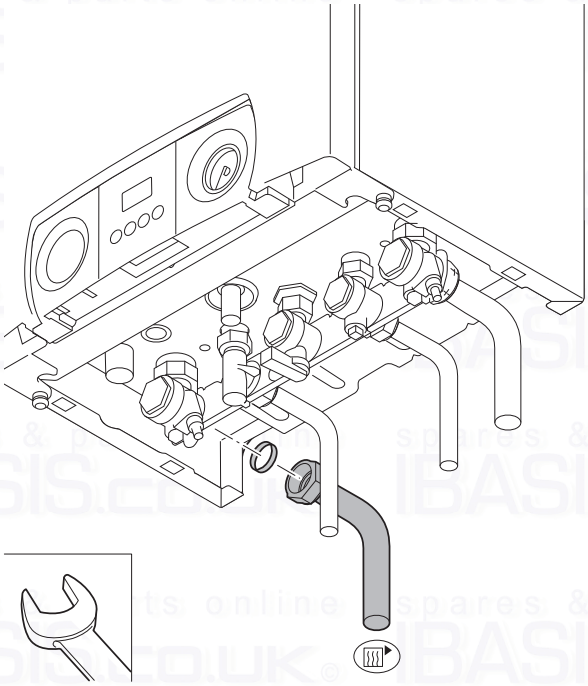

fig. 12 Connecting CH flow

LT.AL.W7H.000.017

2.3.9 Connecting 'CH flow'

- Fit the outlet pipe for CH water to the 'CH flow' 22 mm Ø connection.

The Remeha Avanta Plus has a drain cock built into the flow isolating valve.

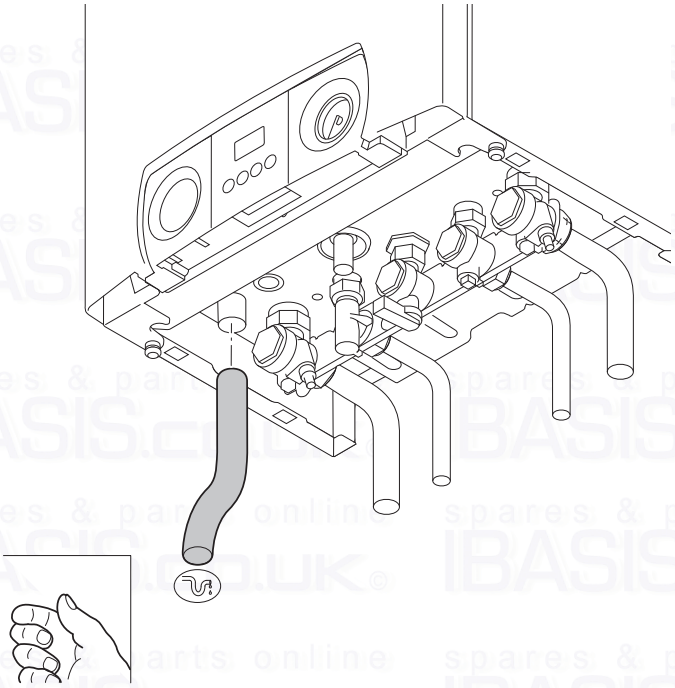

fig. 13 Connecting condensate drain

LT.AL.W7H.000.018

2.3.10 Connecting condensate drain

- Connect the condensate drain outlet to a suitable waste water drain point using acid resisting pipe work (i.e. - ¾" overflow). To enable the siphon in the boiler to be removed / serviced, the connection should not be a permanent one (i.e. "push fit" system).
- To prevent the risk of freezing connect the condensate into an internal vertical soil pipe using a tundish (air break) c/w a min 75 mm water seal trap.
- If the condensate pipe has to run externally make sure this is done by realizing the shortest possible route, and increase the diameter to at least 1¼" or insulate it with weather resistant insulation.
- The drain should slope at least 3 cm per meter, with a maximum horizontal length of 5 m.

☞

- If connecting into an internal discharge branch (i.e. sink waste etc.) the connection should preferably be down stream of the existing waste trap.
- Fill the boiler siphon with water before operation, to prevent flue gasses discharging into the room.
- The condensate drain must be connected in accordance with current regulations.

2.3.11 Connecting under floor heating

The Remeha Avanta Plus can be connected directly to an under floor heating system.
If plastic pipes have been used they must be made oxygen diffusion proof in compliance with DIN 4726/4729
When installing under floor heating with a separate pump, the layout should be such that the under floor heating pump cannot cause a flow to the boiler if there is no heat demand. A low loss header should therefore be fitted between the system and the boiler.

☞

Please ensure that the residual pump duty of the boiler is sufficient for the resistance of the under floor system. If not a low loss header should be used to separate the boiler from the under floor circuit to allow a separate pump sized for the resistance of the under floor system to be used.

2.4 Gas-side connections

2.4.1 Additional guidelines for gas connections

⚠

Before installation, check that the gas meter has sufficient capacity for the demand. Remember to consider the consumption of all household appliances.

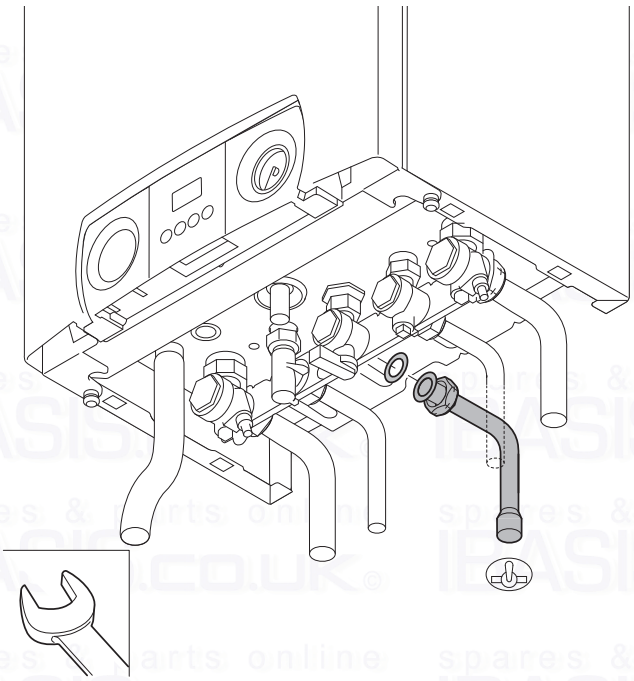

fig. 14 Connecting gas supply

LT.AL.W7H.000.019

2.4.2 Adjusting boiler to other gas-type

The Avanta Plus boilers are suitable for both natural gas and propane firing. For propane a kit with restrictor is required.
For Avanta Plus 39c a LPG conversion set with restrictor and burner is needed.
The boilers are supplied as standard set for natural gas (G20), therefore the following procedure must be carried out BEFORE the boilers are fired and commissioned for the first time on propane:
Fit the conversion kit (instructions included in kit)
Adjust the fan speed (*see Par. 2.9.8*) and adjust the gas/air ratio (*see Par. 2.9.3*).

2.4.3 Connecting the gas supply

- Before starting any work on the gas supply, turn off the main isolation valve.
- Connect the gas supply to the 22 mm Ø boiler connection.

- Make sure there is no dirt in the gas pipe. Blow through the pipe before installation or tap well to purge.
- The principle of the 1:1 gas valve ensures the Avanta range is able to deliver it's full output at inlet pressure down to 17 mbar. However if dynamic pressure below 19 mbar are experienced ensure this is adequate for ALL other gas appliances in the property.
- Preferably install a gas filter in the gas pipe to prevent the gas block from getting dirty.
- The gas supply must be connected, tested for soundness and purged by a qualified Engineer and in accordance with BS6891.

2.5 Flue terminal and air supply connections

The Remeha Avanta Plus is only suitable for room sealed operation with a standard concentric connection 60/100 mm Ø or the optional 80/125 mm Ø connection.
Detailed recommendations for air supply and flue terminals are given in BS 5440.

It should not be necessary to provide compartment ventilation when the boiler is used with a standard concentric flue.

2.5.1 Flue terminal positions

The flue terminal must be located with care to ensure that the products of combustion are dispersed properly in all weather conditions and cause minimum nuisance to the building user or any adjacent buildings. If the terminal is positioned less than 2 m above the ground, balcony, or flat roof where access by persons is possible a suitable guard must be employed.

The boiler will produce a water vapour plume during normal operation.

Positions for the Remeha Avanta Plus are shown in the figure and *table 02.*

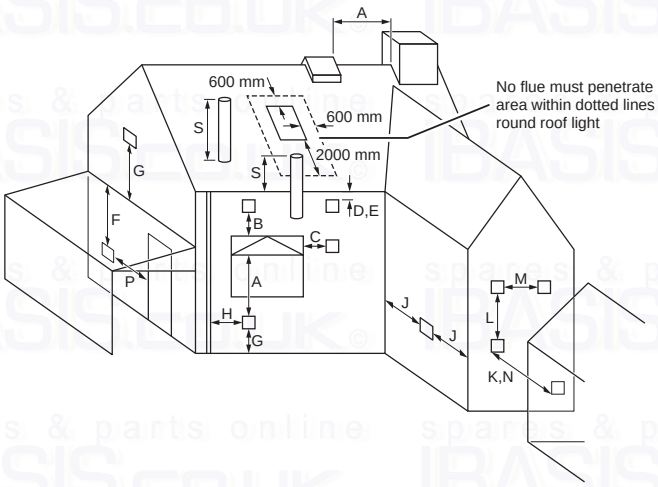

fig. 15 Flue terminal positions

LT.AL.W7H.000.020

Dimensions	Terminal location	Minimum distance (in mm) to terminal (room sealed)
A	Directly below an opening, air brick, opening window, etc.	300
B	Above an opening, air brick, opening window, etc.	300
C	Horizontally to an opening, air brick, opening window, etc.	300
D	Below a gutter or sanitary pipe work	75
E	Below the eaves	200
F	Below a balcony or carport roof	200
G	Above ground, roof or balcony level	300
H	From vertical drain/soil pipe work	150
J	From an internal or external corner	300
K	From a surface or boundary facing the terminal	1500
L	Vertically from a terminal on same wall	1500
M	Horizontally from a terminal on same wall	300
N	From a terminal facing the terminal	1200
P	From an opening in a carport (e.g. door, window) into the building	1200
R	From a vertical structure on the roof	n/a
S	Above an intersection with the roof	300

table 02 Minimum distances to terminal

n/a = not applicable.

2.5.2 Room sealed flue

See *table 03* for the maximum pipe length of flue ducts and air supply pipes for this 'room sealed' application.

It is not necessary to provide combustion air to the room or internal space in which the boiler is installed.

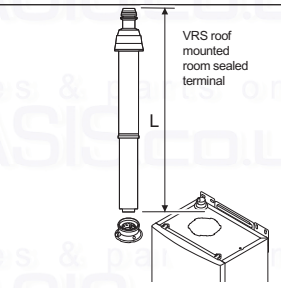

112952.LT.GB.W7H.065

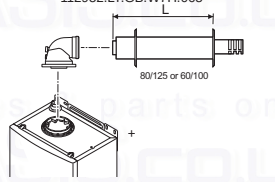

112952.LT.GB.W7H.066

	18s/24s/30s		24c/28c		35c		39c	
Diameter in mm Ø	**60/100**	**80/125**	**60/100**	**80/125**	**60/100**	**80/125**	**60/100**	**80/125**
Maximum length 'L' allowed [m]	6	29	6	29	7	30	5	25
Eq. Length of 90° elbow LT W6H 000 031	1.4							
Eq. Length of 45° elbow LT W6H 000 032	0.65							

table 03 Maximum pipe lengths for flue duct and air supply in room sealed application

☞
For flue installations not covered by this booklet, please contact our technical help line 0118 978 3434.

2.5.3 Connecting the flue terminal and air supply

- How to install the horizontal or vertical flue terminal and air supply kits; please take note of the mounting instructions supplied with it.

☞
- All connections must be airtight and waterproof.
- Horizontal extension sections should slope towards the boiler (at least 3 cm per metre).

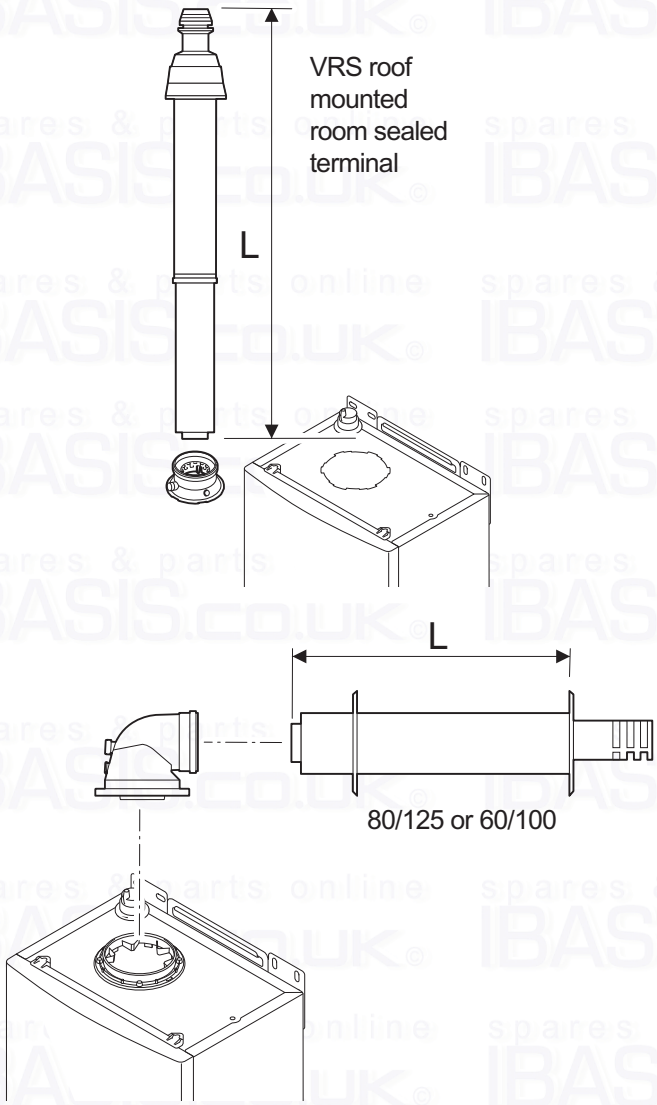

fig. 16 Connecting flue terminal and air supply

112952.LT.GB.W7H.065 + 112952.LT.GB.W7H.066

2.6 Electrical connection

- Connect the boiler to the fused (3 amp) switch spur unit adjacent to boiler.
- The switch unit must always be accessible.

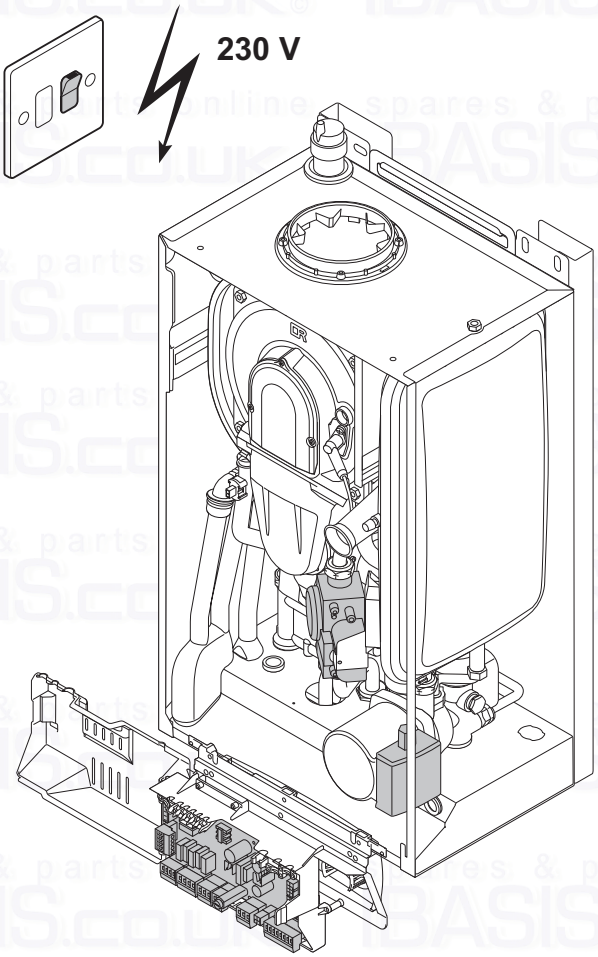

fig. 17 Electrical components with live 230 V

112952.LT.GB.W7H.022

When the switch spur is on the following components of this appliance can be live (230 V):

- electrical connection pump;
- electrical connection gas combination block;
- electrical connection three-way valve;
- most parts of the control unit;
- ignition transformer;
- X1, X2, X4, X5, X6 and X7 terminal block;
- 230 V supply cable connection.

2.6.1 The control unit

The Remeha Avanta Plus has an electronic regulation and control unit with an integrated ionisation flame detector. The heart of the boiler control unit is a microprocessor, the **'abc**®', which controls and protects the boiler.

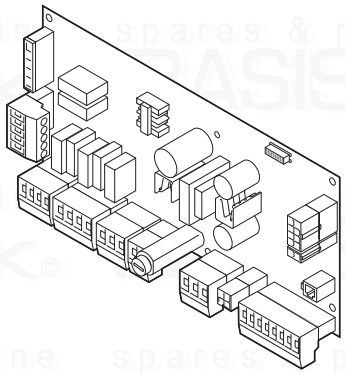

fig. 18 The control unit

LT.AL.W7H.000.023

The maximum rated input is between 115 and 180 W (depending on boiler type).
The boiler is fully pre-wired internally, all external connections can be made using the terminal blocks X5 - X7 - X9 and 230 V input (X2 terminal). See the diagram for the position of the connectors and fuse (F2) on the control unit.
The most important properties of the control unit are summarized in *table 04.*

Manufacturer	Sit Controls
Supply voltage	230 V – 1ph – 50 Hz
Pre-purge time	3 s
Post-purge time	5 s
Ignition time	2.5 s
Safety time	5 s
Anti-cycling time	3 till 10 min.
Fuse value F1 (230 V)	2 AT
DC fan	24 VDC

table 04 Control unit characteristics

Any loads other than those specified above are only allowed if an isolating transformer is used.

The output of the Remeha Avanta Plus can be controlled in the following ways: Options

1. **On/off control – volt free switching -** The boilers internal control will modulate the output to achieve the flow temperature set point of the boiler. This contact is on the connectors 7 and 8 on terminal block X9 (low voltage only).
2. **Modulated control – Open Therm -** The external controls will modulate the boiler's output to achieve the flow temperature determined by the modulating regulator. This contact is on the connectors 7 and 8 on terminal block X9 (low voltage only).
3. **On/off control – 230 V switching -** The boilers internal control will modulate the output to achieve the flow temperature set point of the boiler. This contact is on the connector 1 on terminal block X2 (230 VAC only).
4. **Modulated control – Open Therm in combination with an externally mounted simple 230 V switching time clock -** The boiler will provide room compensated heating and time control over CH and DHW (System boiler), use options 1 & 2.

- All connections on terminal X1, X2, X4, X5, X6 and X7 are 230 VAC.
- All connections on terminal X9 are low voltage only.

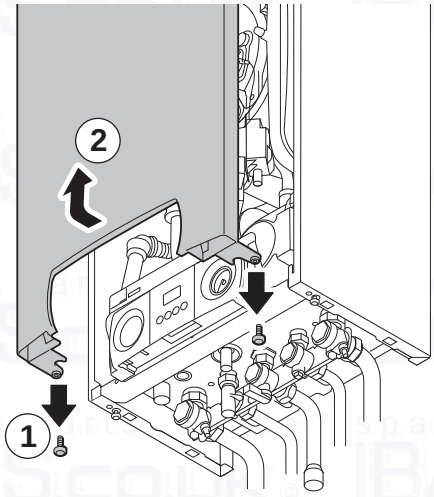

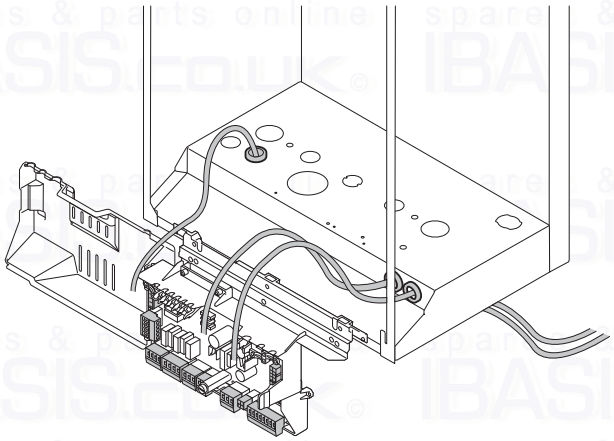

fig. 19 Connecting external controls

LT.AL.W7H.000.024

2.7 Connecting external controls

- Release the two screws at the bottom of the front casing and remove the front casing.
- Feed the cables through the grommet in the base of the boiler.
- Connect the cables to the relevant connectors, as shown in the diagrams.

- Isolate power supply at the fused spur before carrying out any work on the boiler controls.

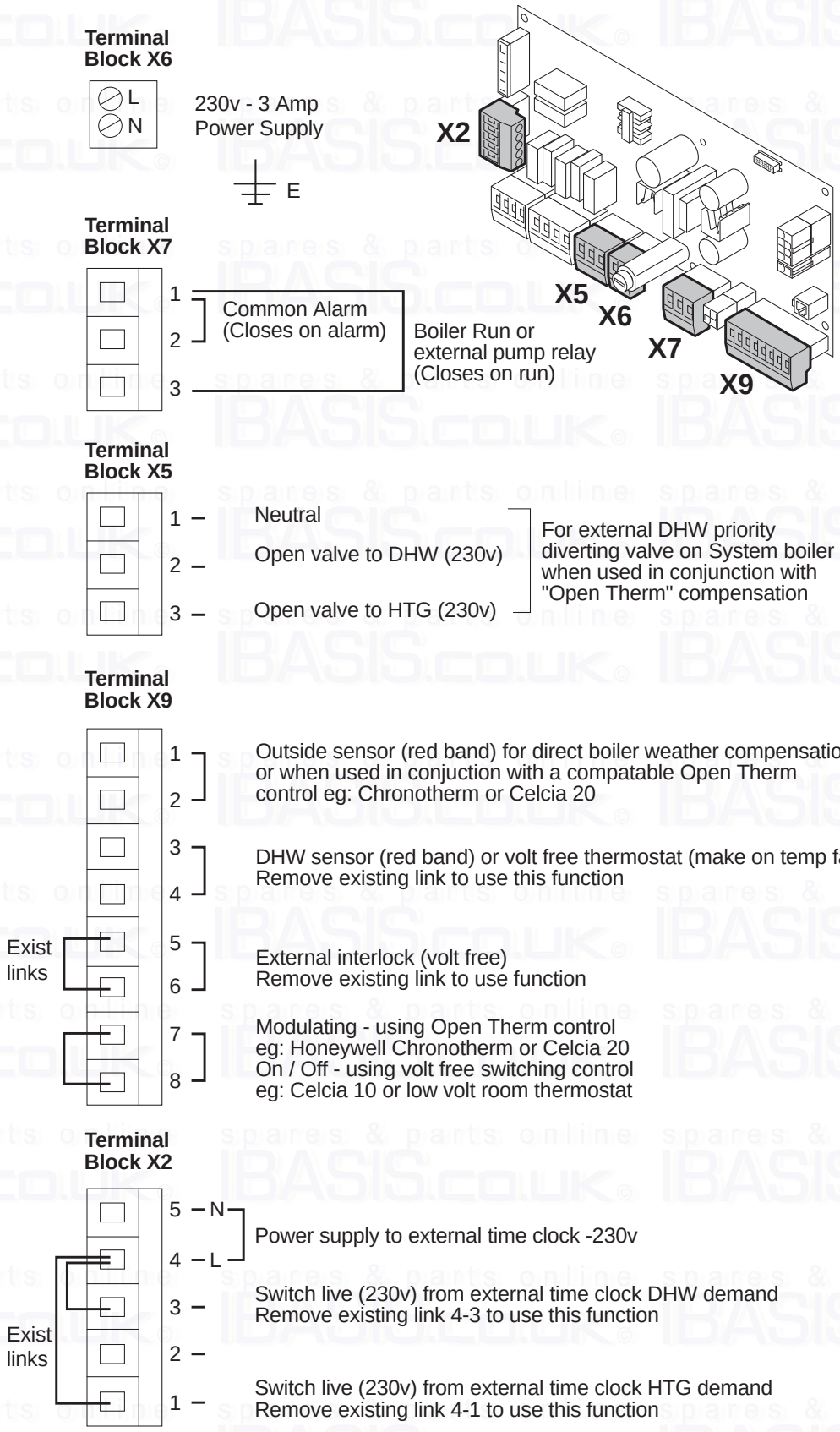

fig. 20 Boiler External Connection terminal details

LT.AL.W7H.000.025f

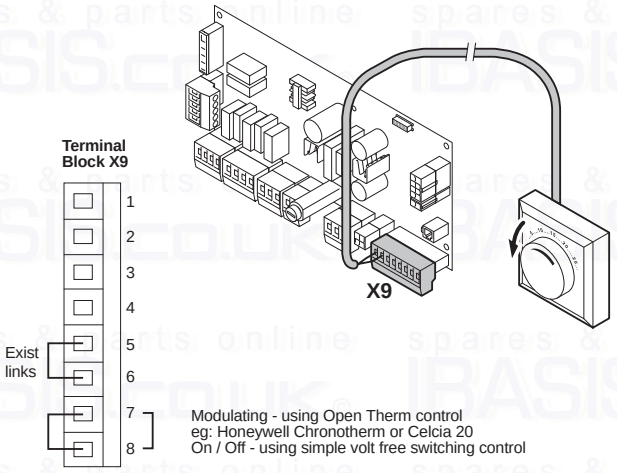

fig. 21 Wiring diagram on/off control

LT.AL.W7H.000.026c

2.7.1 On/off control – room temperature (volt free switching)

The Remeha Avanta Plus can be connected to a 2-wire on/off volt free heating control, programmer or thermostat, ie Remeha Celcia 10. Mount the thermostat in a reference room usually the living room.

- Remove existing link between connectors 7 and 8 of the X9 terminal block before use;
- Connect the 2-wire programmer or room thermostat to connectors 7 and 8 of the X9 terminal block.

If a room thermostat with an anticipation resistor is being used, parameter PS should be changed from 0 to 1, *see par. 2.9.8.*

2.7.2 Time control using an internal or external 230 V clock

When the switch spur is on, the terminal block X2 will be live (230 V).

- A 230 V two channel time clock for CH and DHW control can be connected to the Remeha Avanta Plus
  Live 230 V supply for the time clock - connect to connectors 4 (L) and 5 (N) on X2 terminal block.
- For CH - remove existing link between connectors 4 and 1 of the X2 terminal block and connect the 230 V output from the time clock to terminal 1 on the terminal block X2.
- For DHW - remove existing link between connectors 4 and 3 of the X2 terminal block and connect the 230 V output from the time clock to terminal 3 on the terminal block X2.

For this option to function correctly a link or room control must be fitted between connectors 7 and 8 of X9 terminal block (remove existing link before use).
For continuous DHW on, when using a combi boiler, the link across connectors 3 and 4 MUST NOT be removed
If the 230 V supply for the external time clock is not taken from the boiler – terminal block X2 connections 4 & 5, it must be taken from the same phase as the boiler 230cv supply and correct polarities observed.

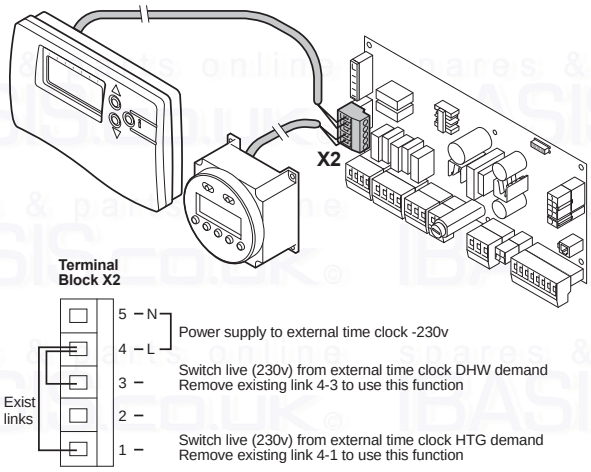

fig. 22 Wiring diagram for an external 230 V time clock

LT.AL.W7H.000.027

2.7.3 Connecting a 230 V time clock in combination with a modulating room control

With an externally mounted simple 230 V switching time clock connected to connectors on X2 terminal block and a Celcia 15 connected to connectors 7 and 8 of X9 terminal block (remove existing link between connectors 7 and 8 before use), the Remeha Avanta Plus will provide room compensated heating and time control over CH and DHW (System boiler).

An OpenTherm® room modulating control (Celcia 15) used in conjunction with a simple external 230 V time clock will provide easy to set up and operate - timed room compensation heating

2.7.4 Modulating control – room or outside compensation

The Remeha Avanta Plus has an OpenTherm® interface. This enables our modulating range of OpenTherm® room controls (e.g. the Remeha Celcia 15 or 20) to be connected without any further modifications.

- Mount the control in a reference room (usually the living room).
- Connect the two-wire interface cables to connectors 7 and 8 of the X9 terminal block (remove existing link between connectors 7 and 8 before use).
- When using the Celcia 20 it is possible to add the outside sensor to provide weather compensation. Connect the outside sensor to connectors 1 and 2 of the X9 terminal block.

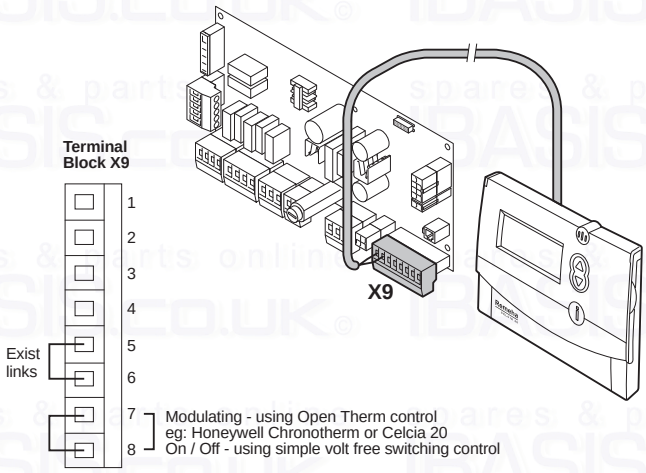

fig. 23 Wiring diagram modulating regulator

LT.AL.W7H.000.028c

If the DHW water temperature on the OpenTherm® control can be adjusted, then the Remeha Avanta Plus will supply water at the temperature determined on the OpenTherm® with the maximum being set in the boiler.
OpenTherm® is an industry standard modulating control available from several control manufacturers.

The Remeha Avanta Plus can therefore be controlled directly by any other controls with this OpenTherm® logo

2.7.5 *Connecting an outside temperature sensor*

An outside temperature sensor can be connected to connectors 1 and 2 of the X9 terminal block.
The boiler will regulate the output using the set point of the internal heat curve.
This can be set as follows:

- Outside temperature minimum set point = -15°C (adjustable with parameter P29 to between 0 and -30°C)
- Outside temperature maximum set point = 20°C (adjustable with parameter P28 to between 0 and 40°C)
- Flow temperature set point at maximum outside temperature = 20°C (adjustable with parameter P27 to between 0 and 60°C)
- Flow temperature set point at minimum outside temperature = 20°C (adjustable with parameter P1 to between 20 and 85°C)

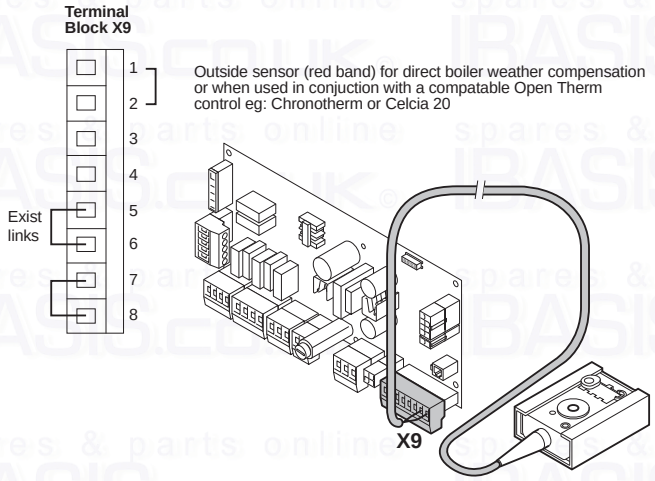

fig. 24 Wiring diagram outside temperature sensor

LT.AL.W7H.000.029e

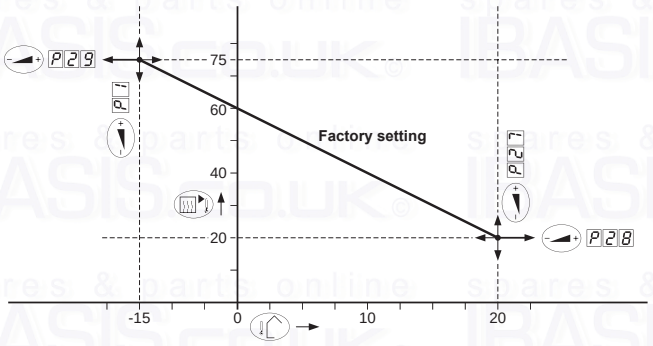

fig. 25 Heat curve Remeha Avanta Plus

LT.AL.W7H.000.030

An outside sensor used in conjunction with a simple 230 V time clock will provide easy to set up and operate - timed weather compensation heating based on the above graph.

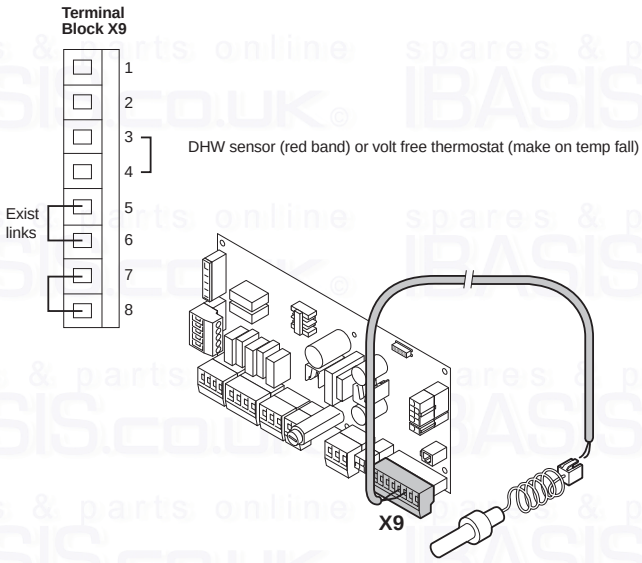

fig. 26 Wiring diagram DHW calorifier sensor or thermostat

LT.AL.W7H.000.031c

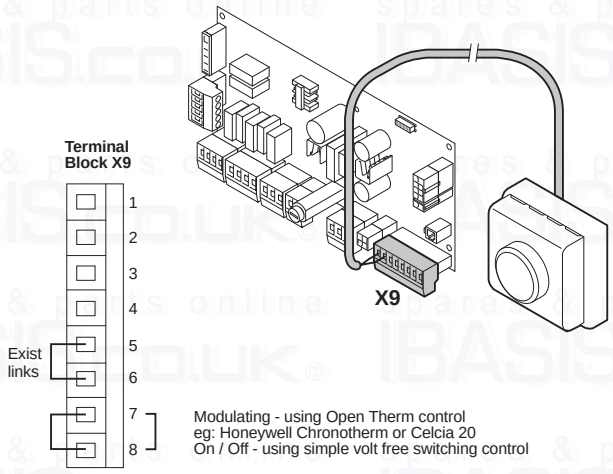

fig. 27 Wiring diagram for frost thermostat

LT.AL.W7H.000.032c

2.7.6 Connecting the DHW sensor/thermostat

- If an external DHW calorifier is being used with the Avanta Plus system boiler a volt-free DHW control sensor or thermostat can be connected to connectors 3 and 4 of the X9 terminal block. The control will automatically detect whether a sensor or a thermostat has been connected.
- For continuous DHW when using a combi boiler, the existing link between connectors 3 and 4 of the X2 terminal block must ***not*** be removed.

2.7.7 Connecting a frost thermostat

The boiler must be installed in a frost-free area to prevent the condensate drain from freezing. However if the temperature of the CH water in the boiler drops too low, the integrated boiler protection device is activated as follows:
- at a water temperature below 7°C: the circulation pump is switched on;
- at a water temperature below 3°C: the boiler is switched on;
- when the water temperature is above 10°C: the boiler is switched off and the circulation pump runs for another 15 minutes.

- A frost thermostat should preferably be installed in rooms with a high frost risk.
- Connect the frost thermostat in parallel to the room thermostat - connectors 7 and 8 of the X9 terminal block (remove existing link between connectors 7 and 8 before use).

If a 230 V switching time clock is connected to terminal block X2, the frost thermostat wired as indicated (on connectors 7 and 8 of the X9 terminal block) it will not bring the boiler on if the time clock is in the OFF position. In these cases the frost stat must be connected in parallel with the time clock on connectors 1 and 4 of the X2 terminal block (frost stat contacts to close on temperature fall).

- The integrated boiler protection described above will not provide complete system or fabric protection.
- When a Celcia 20 control has been fitted to connectors 7 and 8 on X9 (*see Par. 2.7.4*) an outside sensor as detailed *in Par. 2.7.5*) must be used to provide system and building fabric frost protection.
- If a frost thermostat is connected parallel to the Celcia on connectors 7 and 8 on X9, when the frost thermostat calls for heat (contact closed) it will override the Celcia 20 control and cause an error message (OT ERROR) flashes in the display and the boiler will operate continuously to achieve the flow set point.

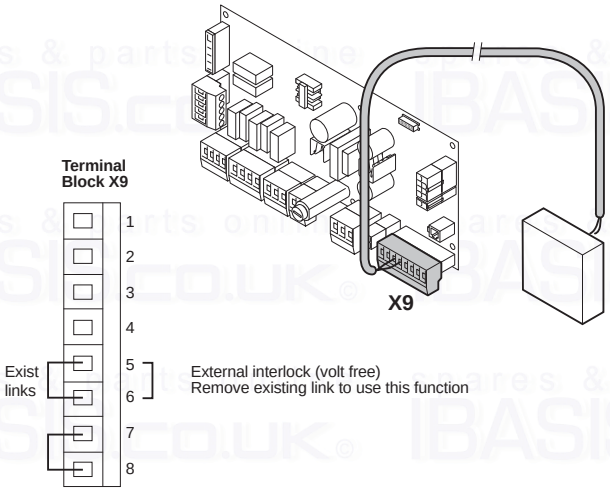

fig. 28 Wiring diagram for an external interlock

LT.AL.W7H.000.033d

2.7.8 Connecting an external interlock

The Remeha Avanta Plus is supplied with an external interlock function. A volt free switching device (i.e. external gas pressure switch, safety thermostat for under floor heating) can be connected to connectors 5 and 6 of the X9 terminal block after removing the existing link. When this circuit is open the boiler will shut down with the display showing (code 9) and will restart when the circuit is closed.

2.7.9 Connecting remote alarm, boiler run indication and external pump relay

As standard the boiler is supplied with 3 volt free connectors on terminal X7. They can be used for an external gas valve, remote alarm and boiler run indication.

- Common alarm signal connect to connectors 1 and 2 on terminal X7. Contact closes on lock out. For this purpose set parameter 24 from 0 to 1.
- Boiler run signal connect to connectors 1 and 3 on terminal X7. Contact closes on heat demand. For this purpose set parameter 24 from 0 to 2.
- Connect an external gas valve to connectors 1 and 3 on terminal X7. Contact closes when the gas valve is activated. For this purpose set parameter 24 from 0 to 3.
- Connect an external pump relay* to connectors 1 and 3 on terminal X7. Contact closes on heat demand. For this purpose set parameter 24 from 0 to 4.

⚠ * never connect a pump directly to connectors 1 and 3 on terminal X7, but only via a relay.

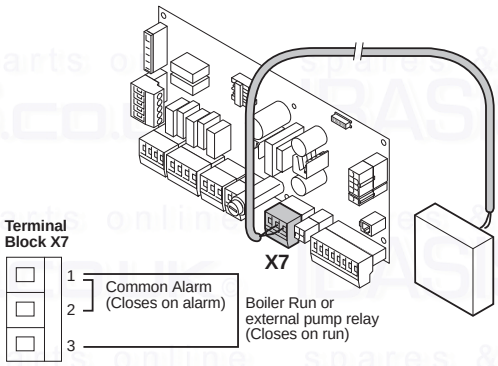

fig. 29 Connecting remote alarm

LT.AL.W7H.000.034d

2.7.10 Connecting a PC/PDA

Using the optional Recom interface package a PC or PDA can be connected to the X10 “telephone connector”. Using the Recom PDA service software you can load, change and download various boiler settings and readings. See the user instructions supplied with the software/hardware.

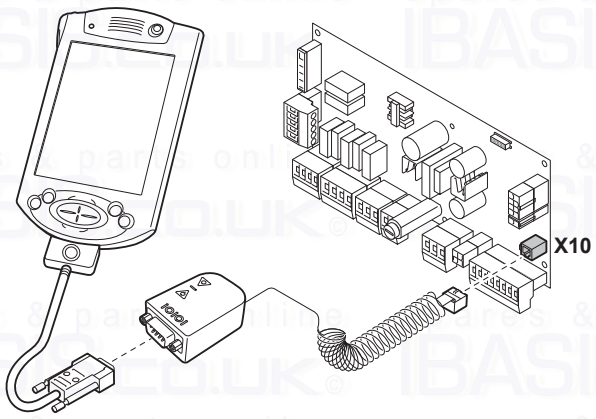

fig. 30 X10 socket connector

LT.AL.W7H.000.035

2.8 Wiring diagram

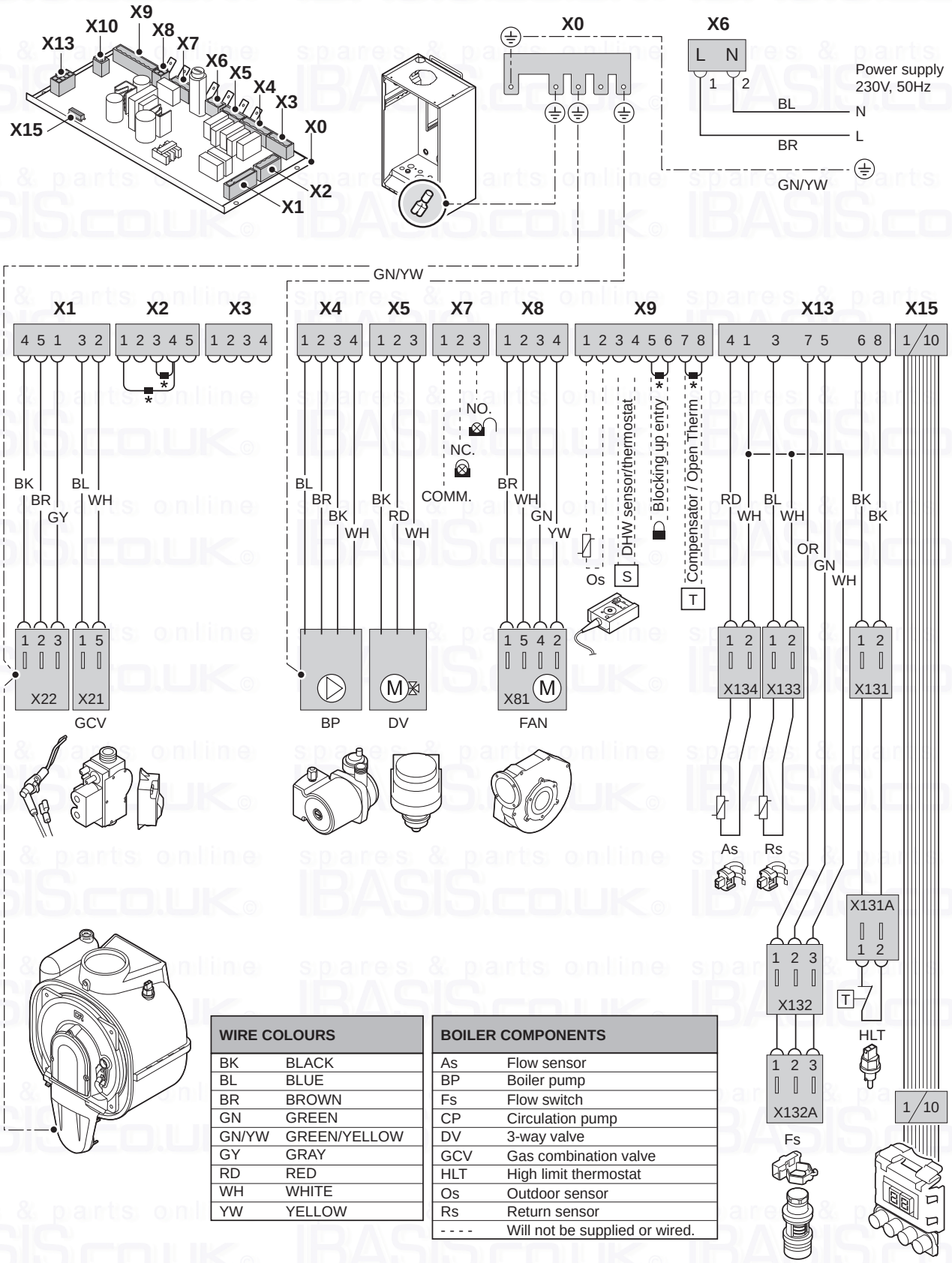

WIRE COLOURS	
BK	BLACK
BL	BLUE
BR	BROWN
GN	GREEN
GN/YW	GREEN/YELLOW
GY	GRAY
RD	RED
WH	WHITE
YW	YELLOW

BOILER COMPONENTS	
As	Flow sensor
BP	Boiler pump
Fs	Flow switch
CP	Circulation pump
DV	3-way valve
GCV	Gas combination valve
HLT	High limit thermostat
Os	Outdoor sensor
Rs	Return sensor
- - - -	Will not be supplied or wired.

fig. 31 Wiring diagram

LT.AL.W7H.000.234e

** Remove existing link between connectors before use*

2.9 Commissioning

2.9.1 *Control Panel*

The control panel of the Remeha Avanta Plus has 4 function keys and a LED display. The function keys are used to read or change the settings and temperatures.

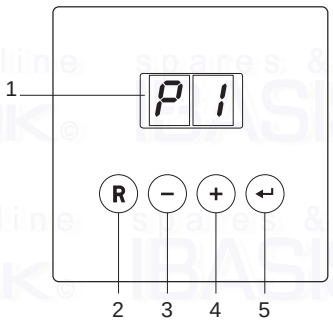

fig. 32 Control Panel

LT.AL.W7H.000.036

1 = display
*2 = **[reset]** key*
*3 = **[-]** key*
*4 = **[+]** key*
*5 = **[enter]** key*

The display has two positions and displays information on the current operating status of the boiler and any errors. Numbers, dots and/or letters can appear in the display. The symbols above the function keys indicate what the function of that particular key then is.

If no key is pressed for longer than three minutes with the “boiler in stand-by mode”, only one LED is lit. With the “boiler operating”, two LED’s are displayed.

- Press any key and the current boiler status and operation code will appear in the display.
- In the event of a fault, the fault code is displayed instead of the dots.

2.9.2 *Additional guidelines for commissioning*

- When commissioning, complete all relevant sections of the Benchmark Commissioning Checklist, located on the inside back of this document.
- Work through all the stages of this section, and send a copy of the completed commissioning details to Broag along with the completed registration card in the supplied warranty leaflet.
- The boiler is supplied as standard for use with Natural Gas and tested at an operating pressure of 20 mbar.

At the time of commissioning, complete all relevant sections of the Benchmark Checklist located on the inside back of this document.

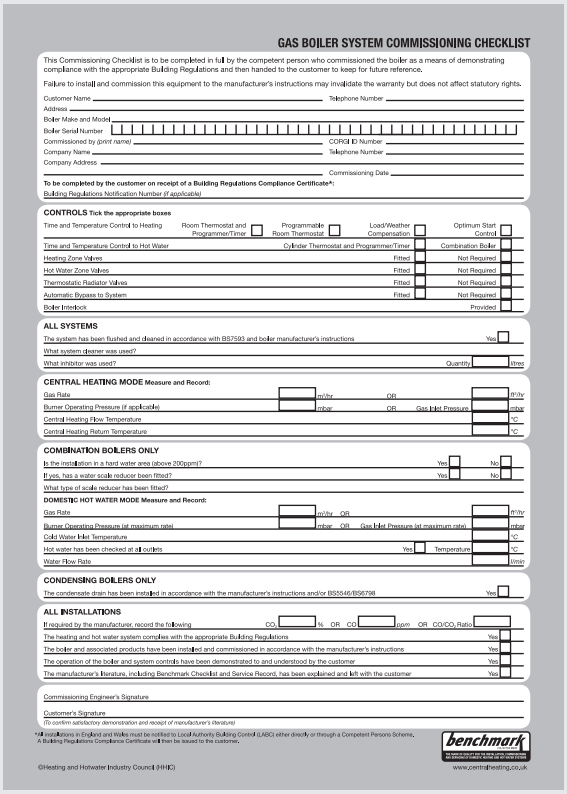

GAS BOILER SYSTEM COMMISSIONING CHECKLIST

This Commissioning Checklist is to be completed in full by the competent person who commissioned the boiler as a means of demonstrating compliance with the appropriate Building Regulations and then handed to the customer to keep for future reference.

Failure to install and commission this equipment to the manufacturer’s instructions may invalidate the warranty but does not affect statutory rights.

Customer Name _____ Telephone Number _____
Address _____
Boiler Make and Model _____
Boiler Serial Number _____
Commissioned by *(print name)* _____ CORGI ID Number _____
Company Name _____ Telephone Number _____
Company Address _____
_____ Commissioning Date _____

To be completed by the customer on receipt of a Building Regulations Compliance Certificate*:
Building Regulations Notification Number *(if applicable)* _____

CONTROLS Tick the appropriate boxes

Time and Temperature Control to Heating	Room Thermostat and Programmer/Timer	☐	Programmable Room Thermostat	☐	Load/Weather Compensation	☐	Optimum Start Control ☐
Time and Temperature Control to Hot Water			Cylinder Thermostat and Programmer/Timer				Combination Boiler ☐
Heating Zone Valves					Fitted	☐	Not Required ☐
Hot Water Zone Valves					Fitted	☐	Not Required ☐
Thermostatic Radiator Valves					Fitted	☐	Not Required ☐
Automatic Bypass to System					Fitted	☐	Not Required ☐
Boiler Interlock							Provided ☐

ALL SYSTEMS
The system has been flushed and cleaned in accordance with BS7593 and boiler manufacturer’s instructions Yes ☐
What system cleaner was used? _____
What inhibitor was used? _____ Quantity _____ litres

CENTRAL HEATING MODE Measure and Record:
Gas Rate _____ m³/hr OR _____ ft³/hr
Burner Operating Pressure (if applicable) _____ mbar OR Gas Inlet Pressure _____ mbar
Central Heating Flow Temperature _____ °C
Central Heating Return Temperature _____ °C

COMBINATION BOILERS ONLY
Is the installation in a hard water area (above 200ppm)? Yes ☐ No ☐
If yes, has a water scale reducer been fitted? Yes ☐ No ☐
What type of scale reducer has been fitted? _____
DOMESTIC HOT WATER MODE Measure and Record:
Gas Rate _____ m³/hr OR _____ ft³/hr
Burner Operating Pressure (at maximum rate) _____ mbar OR Gas Inlet Pressure (at maximum rate) _____ mbar
Cold Water Inlet Temperature _____ °C
Hot water has been checked at all outlets Yes ☐ Temperature _____ °C
Water Flow Rate _____ l/min

CONDENSING BOILERS ONLY
The condensate drain has been installed in accordance with the manufacturer’s instructions and/or BS5546/BS6798 Yes ☐

ALL INSTALLATIONS
If required by the manufacturer, record the following CO_2 _____ % OR CO _____ ppm OR CO/CO_2 Ratio _____
The heating and hot water system complies with the appropriate Building Regulations Yes ☐
The boiler and associated products have been installed and commissioned in accordance with the manufacturer’s instructions Yes ☐
The operation of the boiler and system controls have been demonstrated to and understood by the customer Yes ☐
The manufacturer’s literature, including Benchmark Checklist and Service Record, has been explained and left with the customer Yes ☐

Commissioning Engineer’s Signature _____
Customer’s Signature _____
(To confirm satisfactory demonstration and receipt of manufacturer’s literature)

*All installations in England and Wales must be notified to Local Authority Building Control (LABC) either directly or through a Competent Persons Scheme. A Building Regulations Compliance Certificate will then be issued to the customer.

benchmark
TO ENSURE YOUR GAS SAFE, WELL MAINTAINED AND EFFICIENT HOME YOU MUST CARRY OUT THE CHECKS

©Heating and Hotwater Industry Council (HHIC) www.centralheating.co.uk

fig. 33 Benchmark Checklist

T002019

> ⚠ The boiler must not be put into operation with a different type of gas without reference to *Par. 2.4.2*

2.9.3 *Putting the boiler into operation*

This section details the procedure for putting the boiler into operation. There are 7 stages to the procedure:

1. Isolating the power supply and opening the front cover;
2. Checking the connections and making the boiler operational;
3. Switching the boiler on and setting the controls;
4. Checking/setting the gas/air ratio at full load;
5. Checking/setting the gas/air ratio at low load;
6. Making the boiler ready for use;
7. Instructing the user.

1. Isolating the power supply and opening the front cover

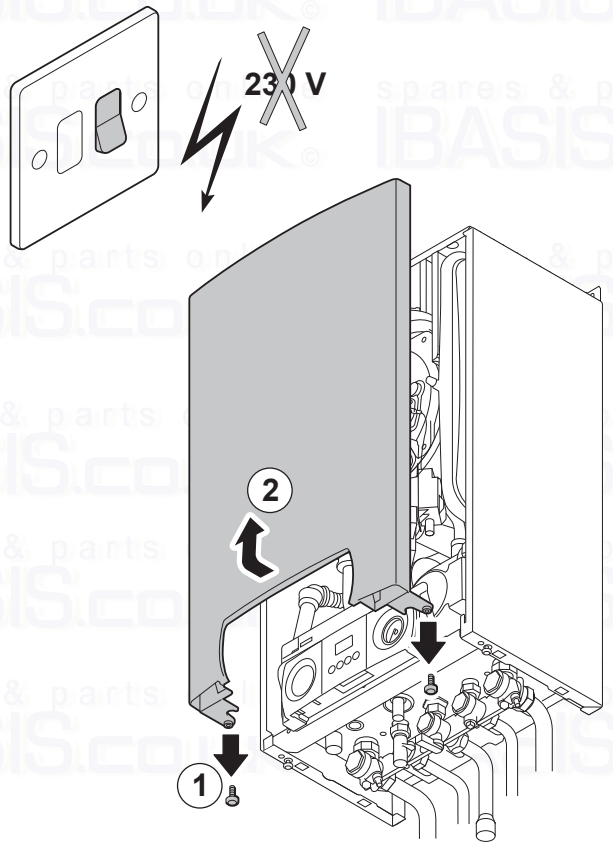

fig. 34 Isolating power

LT.AL.W7H.000.037

- Switch off the boiler at the fused spur and remove the fuse;
- Remove the front panel (release the two screws at the bottom of the front panel, pull the bottom of the panel; forward and lift off the two pins on the top of the main casing).

2. Checking the connections and making the boiler operational

Open the valves on all the radiators connected to the central heating system before filling the system with water.

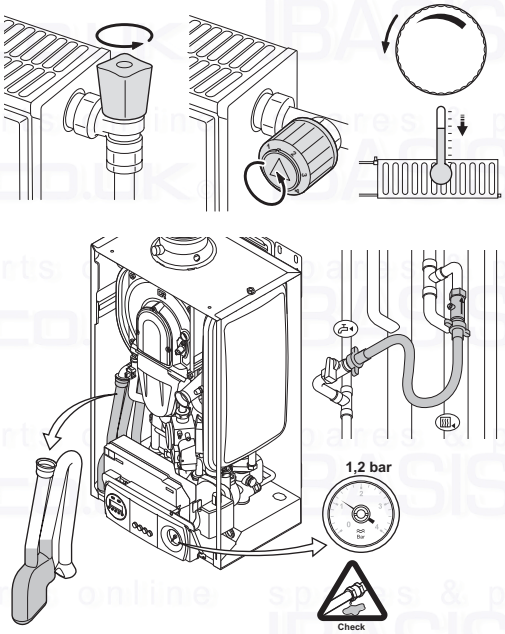

fig. 35 Open the valves

112952.LT.GB.W7H.038

- Open the valves on all the radiators connected to the central heating system;
- Fill the system with water to the design operating pressure (normal for a one/two storey house 1.2 bar, minimum pressure 1 bar, maximum pressure 2.5 bar);
- Whilst filling, air from the system will escape through the automatic air vents and the pump.

- When the vent caps start leaking water, close them with the vent caps supplied attached to gas combination block.
- Avoid water getting into the boiler.
- Check the condensate siphon. This should be filled to the mark with clean water if necessary.

- Check the integral boiler pump – remove chrome centre screw to vent pump and spin the shaft to check that the impellor can move freely;
- Check that all boiler connections are watertight;

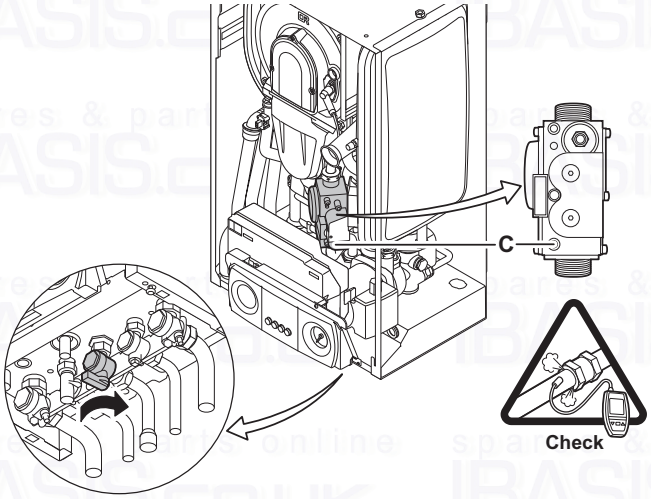

fig. 36 Measurement point c on the gas block

LT.AL.W7H.000.039

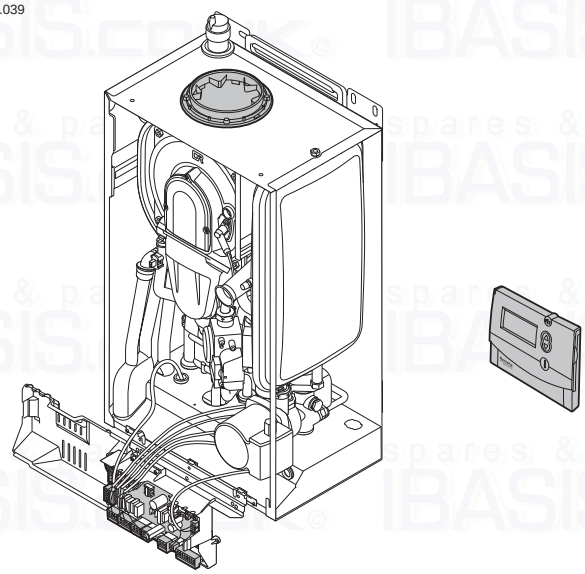

fig. 37 Check electrical connections and thermostat

112952.LT.GB.W7H.040

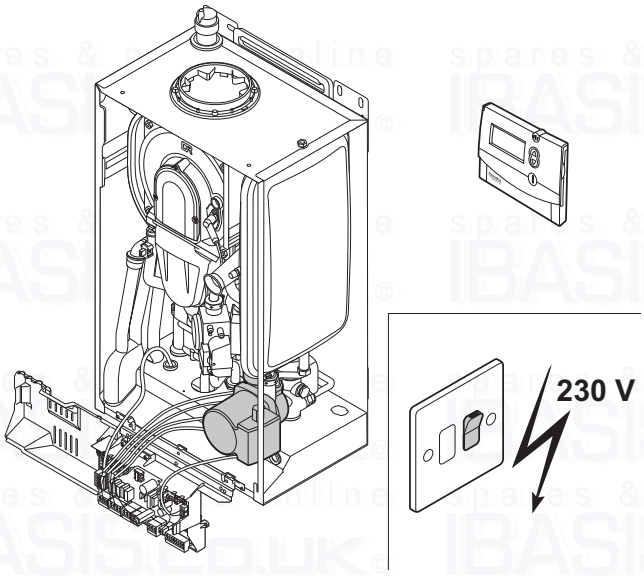

fig. 38 Power on and controls on heat demand

112952.LT.GB.W7H.041

- Open the boiler gas valve and check the static pressure to the boiler at the measurement point (C) on the gas block.

⚠

The boiler has been factory tested for natural gas at 20 mbar. The minimum gas inlet pressure is 17 mbar for natural gas (see 2.4.3).

- Check that the gas supply to the boiler is gas tight (in compliance with the current regulations, see *Chapter* **7** the maximum test pressure at the gas pipe inlet, with the boiler gas valve open, is 60 mbar.
- Vent the gas pipe by unscrewing the measurement point (C) on the gas block (tighten it again as soon as the pipe is fully vented).
- Check that the gas connections in the boiler are sealed.
- Check that all electrical connections, including the earth connection, have been made correctly.
- Check the electrical connections to the thermostat and other external controls.
- Check that the flue-gas and air-supply connections are sealed.

3. Switching the boiler on and setting the controls

- Replace the fuse in the spur and switch on the 230 V power supply.
- Set the controls to heat demand.
- The boiler will begin an automatic venting-programme (which lasts approx. 3 minutes) and will do this every time the power supply is isolated.
- The boiler now starts to run. The operational status is shown in the display. The normal operating status finally shows 0 in the display.

4. Checking/setting the gas/air ratio at full load

The Avanta Plus boilers are suitable for both natural gas and propane firing. An optional propane-set is needed (*see par. 2.4.2*).
The boilers are supplied as standard set for natural gas

(G20), therefore the following procedure must be carried out BEFORE the boilers are fired and commissioned for the first time on propane:
- Fit propane set (instruction in kit);
- adjust the fan speed (*for procedure; see Par. 2.9.8, for values; see table 06 and* table 08) and;
- adjust the gas/air ratio (*for values; see table 06 and table 08*).

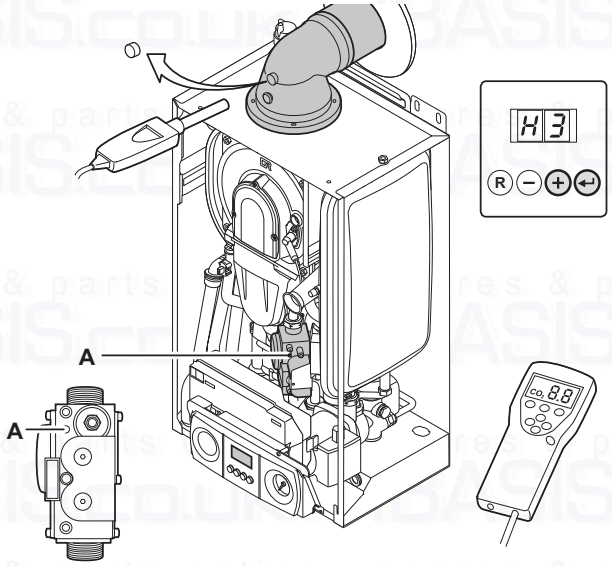

fig. 39 Check the gas/air ratio control – set to full load – gas/air ratio adjustment A on gas block

112952.LT.GB.W7H.042

Combustion checking/setting must be carried out by a competent person. It must not be carried out unless that person is equipped with a combustion analyser which conforms to the relevant British Standards.

When checking/setting the air/gas ratio setting in full load it may be necessary to run water through the domestic hot water circuit to allow time for this part of the procedure, this will prevent the boiler from cycling on low heating demands (Combi boilers only).

Setting values O_2/CO_2 for natural gas H / L			
Boiler type	Fan speed (rpm)	O_2	CO_2
	Full load H3 *)	%	%
18s	approx. 3500	5.2 ± 0.1	8.8 ± 0.1
24s	approx. 4300	5.2 ± 0.1	8.8 ± 0.1
30s	approx. 5200	5.2 ± 0.1	8.8 ± 0.1
24c	approx. 4400	5.2 ± 0.1	8.8 ± 0.1
28c	approx. 5500	5.2 ± 0.1	8.8 ± 0.1
35c	approx. 6300	5.2 ± 0.1	8.8 ± 0.1
39c	approx. 6700	5.2 ± 0.1	8.8 ± 0.1

table 05 Setting values full load CO_2 and O_2 (front panel not fitted)

Setting values O_2/CO_2 for LPG (propane)			
Boiler type	Fan speed (rpm)	O_2	CO_2
	Full load H3 *)	%	%
18s	Approx. 3300	5.1 ± 0.1	10.5 ± 0.1
24s	approx. 4100	5.1 ± 0.1	10.5 ± 0.1
30s	approx. 5000	5.1 ± 0.1	10.5 ± 0.1
24c	approx. 4300	5.1 ± 0.1	10.5 ± 0.1
28c	approx. 5200	5.1 ± 0.1	10.5 ± 0.1
35c	approx. 5800	5.1 ± 0.1	10.5 ± 0.1
39c	approx. 6500	5.1 ± 0.1	10.5 ± 0.1

table 06 Setting values full load CO_2 and O_2 (front panel not fitted)

*) On forced full load, the 2nd digit indicates the operating code

- Unscrew the flue gas sampling cap and connect the flue gas analyser.
- Set boiler to full load: Press the **[enter]-** key, keep it pressed and also press the **[+]-**key until H3 appears in the display; full load has been set.
- Once the unit has reached the full-load fan speed, measure the O_2/CO_2-percentage and compare this to the values in *table 05.*
- If the values are not in accordance with the table then correct the gas /air ratio controls using the adjusting screw A on the gas block.
- If the value is too low turn the screw A anti clockwise; this increases the gas rate – if the value is too high turn the screw clockwise which decreases the gas rate.
- Check the flame through the sight glass which should be stable with a regular blue distribution.

☞
Only make small adjustments of the adjusting screw, maximum 1/8 turns when setting O_2/CO_2

☞
Ensure that the analysing probe has a gas tight seal in the sampling point with the probe end in the centre of the flue duct.

⚠
After setting the O_2/CO_2 level to the right value, the maximum CO level should not exceed 200 ppm for natural gas or not exceed 300 ppm for LPG (propane).

5. Checking/setting the gas/air ratio at part load

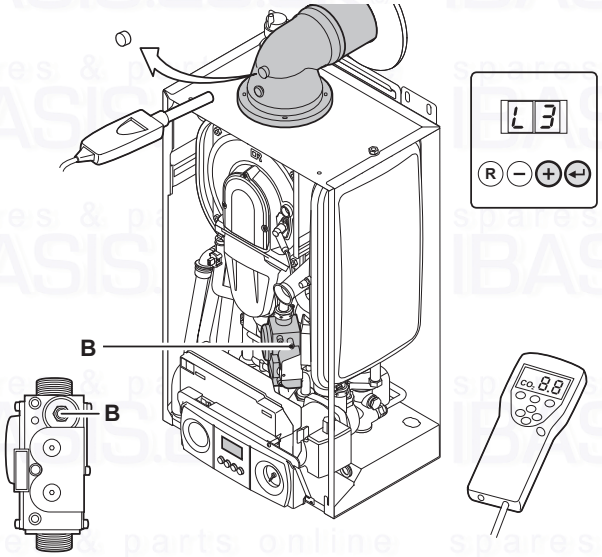

fig. 40 Check the gas/air ratio control – set to part load – gas/air ratio adjustment B on gas block

112952.LT.GB.W7H.043

Checking/setting values O_2/CO_2 for natural gas (G20)			
Boiler type	**Fan speed (rpm)**	O_2	CO_2
	Part load L3 *)	%	%
18s	approx. 1300	5.2 ± 0,1	8.8 ± 0,1
24s	approx. 1300	5.2 ± 0,1	8.8 ± 0,1
30s	approx. 1300	5.2 ± 0,1	8.8 ± 0,1
24c	approx. 1300	5.2 ± 0,1	8.8 ± 0,1
28c	approx. 1300	5.2 ± 0,1	8.8 ± 0,1
35c	approx. 1300	5.2 ± 0,1	8.8 ± 0,1
39c	approx. 1300	5.2 ± 0,1	8.8 ± 0,1

table 07 Checking/setting values part load CO_2 and O_2 (front panel not fitted)

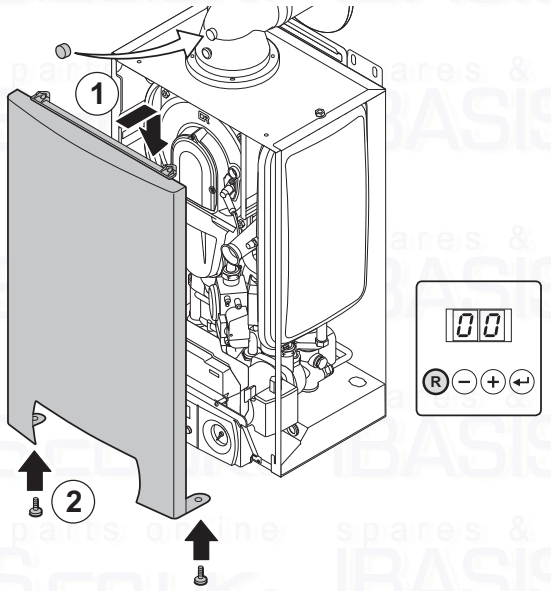

fig. 41 Preparing boiler for use

112952.LT.GB.W7H.044

Checking/setting values O_2/CO_2 for LPG (propane)			
Boiler type	Fan speed (rpm)	O_2	CO_2
	Part load L3 *)	%	%
18s	approx. 2000	5.1 ± 0.1	10.5 ± 0.1
24s	approx. 2000	5.1 ± 0.1	10.5 ± 0.1
30s	approx. 2000	5.1 ± 0.1	10.5 ± 0.1
24c	approx. 2000	5.1 ± 0.1	10.5 ± 0.1
28c	approx. 2000	5.1 ± 0.1	10.5 ± 0.1
35c	approx. 2000	5.1 ± 0.1	10.5 ± 0.1
39c	approx. 2000	5.1 ± 0.1	10.5 ± 0.1

table 08 Checking/setting values part load CO_2 and O_2 (front panel not fitted)

*) On forced part load, the 2nd digit indicates the operating code.

- Set boiler to part load: Press the **[enter]-** key until L3 appears in the display, part load has been set.
- Once the unit has reached the part load fan speed, measure the O_2/CO_2-percentage and compare this to the value in *table 07*.
- If the values are not in accordance with the table then correct the gas /air ratio controls using the adjusting screw B on the gas block.
- If the value is too low turn the screw B clockwise; this increases the gas rate – if the value is too high turn the screw B anti clockwise which decreases the gas rate.

Check the flame through the sight glass which should be stable with a regular orange distribution. Once the unit has been set to part load, the 'test at full load' should be repeated.

☞ Ensure that the analysing probe has a gas tight seal in the sampling point with the probe end in the centre of the flue duct.

- Repeat the 'test at full load' and 'test at part load' as often as necessary until the correct values are achieved without further adjustments.

☞ Only make small adjustments of the adjusting screw; maximum 1/8 turns when setting O_2/CO_2).

6. Preparing the boiler for use

- Remove the analysing probe and replace the cap on the flue gas sampling point.
- Refit the front panel and secure with the two screws again.
- Press **[reset]**-key for the boiler to return to the normal operating mode.

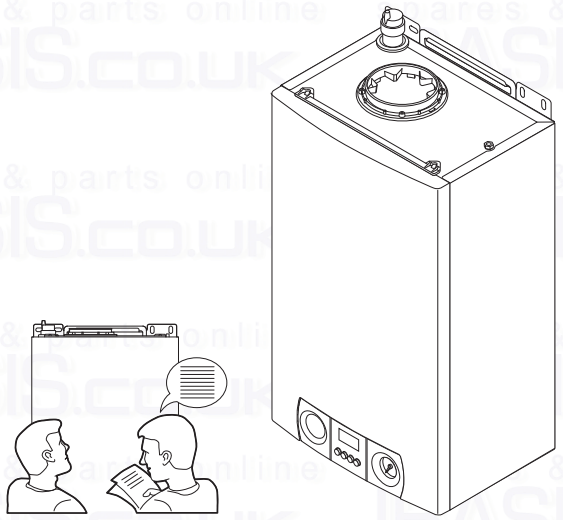

fig. 42 Instructing the user

112952.LT.GB.W7H.045

Following a manual override the boiler will return to normal operating mode if no keys are pressed for 15 minutes.

- Run the boiler on heating until the system reaches approx 70°C.
- Switch the boiler off (using the controls i.e. thermostat or time clock).
- Once the pump has turned off vent the system once again.
- Check the water pressure and add more water through the mains fill loop if necessary.
- Complete the type plate in the boiler by adding the gas type.
- Fill in Commissioning sheet, located on the inside back of this document.

The boiler is now ready for operation.

The Remeha Avanta Plus is delivered pre-tested and operating parameters set up with standard factory settings to suit the most common systems. These setting can be adjusted to suit specific site conditions but must not be changed without reference to Broag or one of our approved contractors.

7. Instructing the user

- It is the responsibility of the installer as part of the commissioning procedure to instruct the user in the day to day operation of the boiler and controls fitted to the system and to hand over the completed Benchmark Checklist at the back of this manual.

2.9.4 Normal start-up procedure

- Switch on the boiler at the fused spur unit and ensure that the time control is in the on position and any other controls (i.e. room thermostat etc) calling for heat.
- The boiler will begin its start sequence.

The following sequence will appear in the display:

- A display test will briefly appear showing all segments of the display.
  - F XX software version
  - P XX parameter version
- A venting cycle of 3 minutes now follows, the version numbers will be displayed alternately;
- Next, the following will appear in the display:
  - 1 pre-purge stage
  - 2 Ignition stage
  - 3 operating in CH mode **or:**
  - 4 operating in DHW mode
  - 7 pump run on after CH or DHW is satisfied
  - 0 stand-by mode

2.9.5 *Error during the start-up procedure*

- If the display is blank (should show LEDs or letters), check:
- 230 V main supply available to switch spur
- switch spur fuse
- cable and connections between the switched spur and the boiler control unit
- fuse on the boiler control unit (F2 = 2AT, 230V)

- An error code appearing in the display can be recognised as follows:
  E 10, (the display alternately shows an E and a number e.g. 10). The meaning of this error codes can be found in the error table, see *Chapter 4.*
- Resolve the error first if possible.
- Press the **[reset]**- key and hold for at least 1 second to restart the boiler.

☞
After any error E1, E2, E7, E10 or E13 ; the 3 minute venting cycle will run first before starting the boiler.

- Checking **DHW** function;
- Turn on a hot water tap, the display shows:
  1 pre-purge stage
  2 Ignition stage
  4 operating in DHW mode
- Close the hot water tap, after a short time the display shows:
  1 pre-purge stage
  7 pump run on after CH or DHW is satisfied
  0 stand-by mode

- Checking **CH** function;
- Ensure the time control is in the CH on position
- Set the room thermostat on a high demanding temperature and, the display shows
  1 pre-purge stage
  2 Ignition stage
  3 operating in CH mode
- Set the room thermostat back to a lower temperature (no more heat demand), the display shows;
  4 operating in DHW mode (boost to DHW plate on minimum load)
  5 waiting-time; 3 to 10 minutes (only when flow temperature has already been reached and heating demand is still existing)
  1 pre-purge stage
  7 pump run on after CH or DHW is satisfied
  0 stand-by mode

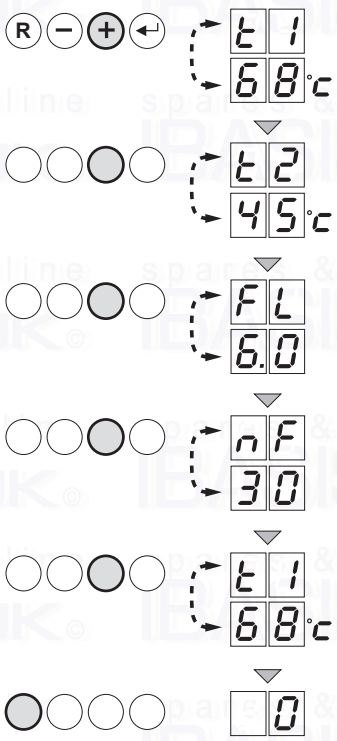

fig. 43 Read out settings

LT.AL.W7H.000.046

- If the boiler is set to the economy setting (*see par. 2.9.8*), it will not supply a boost to DHW after CH is satisfied. The display then shows 1 pre-purge stage, 6 pump run on after CH, 0 stand-by mode.
- If a two channel time clock is fitted and connected to a combi boiler and the time control for DHW is in the “OFF” position, the DHW production will be disabled unless the link between connectors 2 and 3 on the X2 terminal is fitted (normally factory fitted).

2.9.6 Read out settings

The following settings can be read out in the ‘user menu’:

- t 1 = flow temperature [°C]
- t 2 = return temperature [°C]
- t 3 = boiler temperature [°C]
- t 4 = outside temperature [°C]
- FL = ionisation current [µA]
- nF = fan speed [rpm]

- Press the **[+]** key, until t 1 appears and, for example, 68 (68 °C), the current flow temperature;
- Press the **[+]** key again until t 2 appears and, for example, 45 (45 °C), the current return temperature;
- Press the **[+]** key again until t 3 appears and, for example, 50 (50 °C), the current boiler temperature;
- Press the **[+]** key again until t 4 appears and, for example, 18 (18 °C), the current outside temperature;
- Press **[+]** key again until FL appears and e.g. 6.0 (6 uA), the present ionisation current;
- Press **[+]** key again until nF appears and e.g. 30 (3000 rpm), the present fan speed;
- Press **[+]** key again and the read-out cycle will start again with t 1, etc.;
- Press **[reset]** key to return to the display with the current operating status.

2.9.7 Adjust the boiler according to the system

The operating parameters of the Remeha Avanta Plus have been factory set to suit most systems. However it is possible to adjust some of the parameters to enable the Remeha Avanta Plus to operate more efficiently to match specific system designs and site conditions. These parameters are split into two specific sections

1. User level – Parameters P 1 to P 6; can be changed by the user to suit CH and DHW comfort conditions
2. Service level – P 17 to dF ; must only be changed by a competent qualified Engineer.

How to change the parameters at user level can be read in the “User manual” provided and therefore will not be detailed in this Installation and Service manual.

2.9.8 *Changing the parameters at service level (with access code)*

To avoid non authorised adjustments, some parameter settings can only be changed once the special access code 12 has been entered. This code may only be used by qualified installers. The following settings can be changed at user and service level:

Codes in display		Description	Setting range and notes where applicable	Factory settings			
				24c	28c	35c	39c
Can also be changed by users	P 1	T_{set} flow	20 - 85°C	75°C			
	P 2	T_{set} DHW	40 - 65°C	55°C			
	P 3	Boiler regulation	0 = CH_{off} and DHW_{off} 1 = CH_{on} and DHW_{on} 2 = CH_{on} and DHW_{off} 3 = CH_{off} and DHW_{on}	1			
	P 4	Eco-mode or DHW preheat setting	0 = DHW preheat on 1 = DHW preheat off* 2 = regulated by controller	2			
	P 5	Anticipated current	0 = no anticipated current for thermostat on/off 1 = anticipated current for thermostat on/off	0			
	P 6	Display off automatically	0 = display stays off 1 = display stays on 2 = displaylight switches off automatically after 3 minutes	2			
To be changed by installer only	P 17	Maximum fan speed CH (natural gas)	10 – 70 x 100 rpm	35 [1])	37 [1])	41 [1])	50 [1])
		Maximum fan speed CH (propane)	10 – 70 x 100 rpm	33 [1])	37 [1])	41 [1])	48 [1])
	P 18	Maximum fan speed DHW (natural gas)	**Do not change *****	44 [1])	55 [1])	63 [1])	67 [1])
		Maximum fan speed DHW (propane)	**Adjustments for propane firing**	43 [1])	52 [1])	60 [1])	65 [1])
	P 19	Minimum fan speed (CH and DHW) (natural gas)	**Do not change *****	13			
		Minimum fan speed (CH and DHW) (propane)	**Adjustments for propane firing**	20			
	P 20	Starting fan speed	**Do not change**	25	25	28	30
	P 21	Pump setting CH	0 = low 1 = high	0			
	P 22	Pump running time after CH	1 - 99 minutes	2			
	P 23	Connection with Heat Recovery Unit (HRU)	0 = no connection with HRU 1 = connection with HRU	0			
	P 24	State remote alarm (X7 terminal)	0 = off (connectors 1 and 2 closed) 1 = alarm signal (connectors 1 and 2 closed) 2 = run indication (connectors 1 and 3 closed) 3 = ext. gas valve (connectors 1 and 3 closed) 4 = external pump relay (connectors 1 and 3 closed)	0			
	P 25	Legionella protection	0 = off 1 = on 2 = automatic (after putting boiler into operation, it will run for DHW operation 65°C once a week)	0			
	P 26	DHW cut-in temperature	2 - 15°C	5			

To be changed by installer only	P 27	Heat curve set point flow temperature	0 - 60 °C	20
	P 28	Heat curve set point outside temperature (min)	0 - 30 °C	20
	P 29	Heat curve set point outside temperature (max)	-40 - 0 °C	- 15**
	P 30	Boiler type	0 = combi 1 = system	0
	P 31	DHW control stop	0 - 20 °C	15
	P dF (P dU is shown later)	Restore factory settings	On identification plate dF setting X is shown. Change parameter into X will restore the factory settings, *see par. 2.9.10*	X
			On identification plate dU setting Y is shown. Change parameter into Y will restore the factory settings, *see par. 2.9.10*	Y

table 09 Settings at service level

[1]) Do not exceed this value

* the system boiler in combination with an external calorifier will not warm up the calorifier in the Eco-mode.

** minus character is not shown in display

*** only change for propane firing

Codes in display		Description	Setting range and notes where applicable	Factory settings		
				18s	24s	30s
Can also be changed by users	P 1	T_{set} flow	20 - 85°C	75°C		
	P 2	T_{set} DHW	40 - 65°C	55°C		
	P 3	Boiler regulation	0 = CH_{off} and DHW_{off} 1 = CH_{on} and DHW_{on} 2 = CH_{on} and DHW_{off} 3 = CH_{off} and DHW_{on}	2		
	P 4	Eco or comfort setting	0 = comfort setting 1 = eco mode* 2 = regulated by controller	2		
	P 5	Anticipated current	0 = no anticipated current for thermostat on/off 1 = anticipated current for thermostat on/off	0		
To be changed by installer only	P 6	Display off automatically	0 = display stays off 1 = display stays on 2 = displaylight switches off automatically after 3 minutes	2		
	P 17	Maximum fan speed CH (natural gas)	10 – 70 x 100 rpm	35 [1])	37 [1])	52 [1])
		Maximum fan speed CH (propane)	10 – 70 x 100 rpm	33 [1])	35 [1])	50 [1])
	P 18	Maximum fan speed DHW (natural gas)	**Do not change *****	35 [1])	43 [1])	52 [1])
		Maximum fan speed DHW (propane)	**Adjustments for propane firing**	33 [1])	41 [1])	50 [1])
	P 19	Minimum fan speed (CH and DHW) (natural gas)	**Do not change *****	13		
		Minimum fan speed (CH and DHW) (propane)	**Adjustments for propane firing**	20		

To be changed by installer only	P 20	Starting fan speed	**Do not change**	25	25	28
	P 21	Pump setting CH	0 = low 1 = high	0		
	P 22	Pump running time after CH	1 - 99 minutes	2		
	P 23	Connection with Heat Recovery Unit (HRU)	0 = no connection with HRU 1 = connection with HRU	0		
	P 24	State remote alarm (X7 terminal)	0 = off (connectors 1 and 2 closed) 1 = alarm signal (connectors 1 and 2 closed) 2 = run indication (connectors 1 and 3 closed) 3 = ext. gas valve (connectors 1 and 3 closed) 4 = external pump relay (connectors 1 and 3 closed)	0		
	P 25	Legionella protection	0 = off 1 = on 2 = automatic (after putting boiler into operation, it will run for DHW operation 65°C once a week)	1		
	P 26	DHW cut-in temperature	2 - 15°C	5		
	P 27	Heat curve set point flow temperature	0 - 60 °C	20		
	P 28	Heat curve set point outside temperature (min)	0 - 30 °C	20		
	P 29	Heat curve set point outside temperature (max)	-40 - 0 °C	- 15**		
	P 30	Boiler type	0 = combi 1 = system	1		
	P. 31	DHW control stop	0 - 20 °C	15		
	P dF (P dU is shown later)	Restore factory settings	On identification plate dF setting X is shown. Change parameter into X will restore the factory settings, *see par. 2.9.10*	X		
			On identification plate dU setting Y is shown. Change parameter into Y will restore the factory settings, *see par. 2.9.10*	Y		

table 10 Settings at service level

[1]) Do not exceed this value

* the system boiler in combination with an external calorifier will not warm up the calorifier in the Eco-mode.

** minus character is not shown in display

*** only change for propane firing

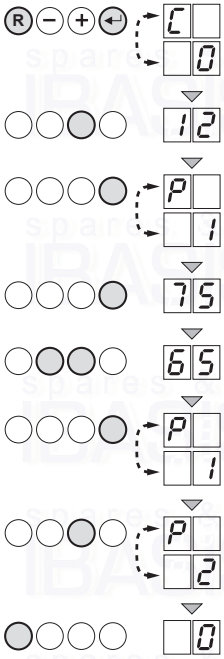

fig. 44 Change parameters in service level

LT.AL.W7H.000.047

Changing the factory settings could result in the boiler not working properly.

The parameters can be changed from the stand-by status as follows:

- Press the **[enter]**-key and briefly the **[reset]-** key until codes C and 0 appear alternately in the display.
- Press the **[+]**-key until access code 12 is displayed.
- Press the **[enter]**-key until P 1 appears (codes P and 1 are displayed alternately);
- This parameter can now be changed as follows;
- Press the **[enter]**-key; the set value for the maximum flow temperature now appears e.g.; 75 (75°C).
- Press the **[+]** or **[-]**-key to change this value, for example to 65 (65°C).
- Press **[enter]**-key to confirm the value; codes P and 1 are displayed alternately.
- Press the **[+]**-key to change the next parameter, etc.
- Press **[reset]**-key to return to the operating mode.

The boiler will automatically return to the normal operating mode if no keys are pressed for 10 minutes.

2.9.9 *Changing the maximum output (Hi) for CH operation*

The maximum output for CH operation can be changed with parameter P 17 (maximum fan speed) and is set standard to a speed of 3500, 3700, 4100 or 5000 rpm for the four Combi-types and 3600, 3700 or 5200 rpm for the three System-types. See the speed-input ratio figures.

This parameter can be changed from the stand-by status as follows:

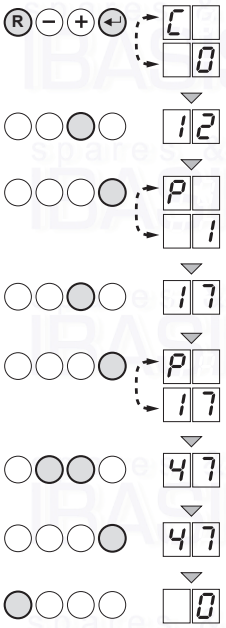

fig. 45 Change boiler output

LT.AL.W7H.000.048

- Press the **[enter]**-key and briefly the **[reset]-** key until codes C and 0 appear alternately in the display.
- Press the **[+]**-key until access code 12 is displayed.
- Press the **[enter]**-key until P 1 appears (codes P and 1 are displayed alternately);
- Press the **[+]**-key to go to parameter 17.
- Press the **[enter]**-key until P 17 appears (codes P and 17 are displayed alternately);
- Press the **[+]** or **[-]**-key to change this value for Avanta Plus 28c, for example to 46 (4600 rpm corresponds with 22 kW).
- Press **[enter]**-key to confirm the value.
- Press **[reset]**-key to return to the operating mode.

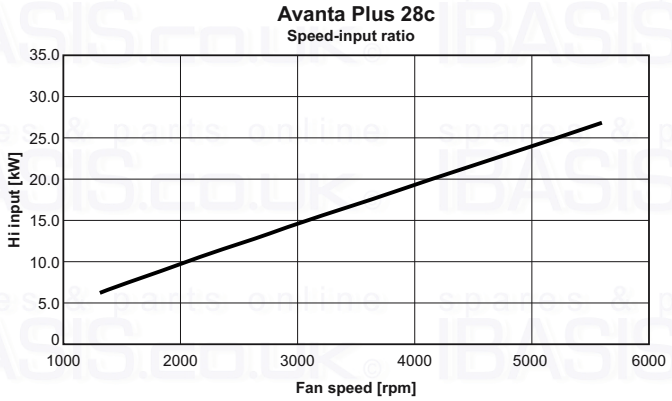

The speed-input ratio figures for Avanta Plus 18s, 24s and 24c are equal to 28c.

fig. 46 Fan speed / boiler input ratio Avanta Plus 28c

LT.AL.W7H.000.050

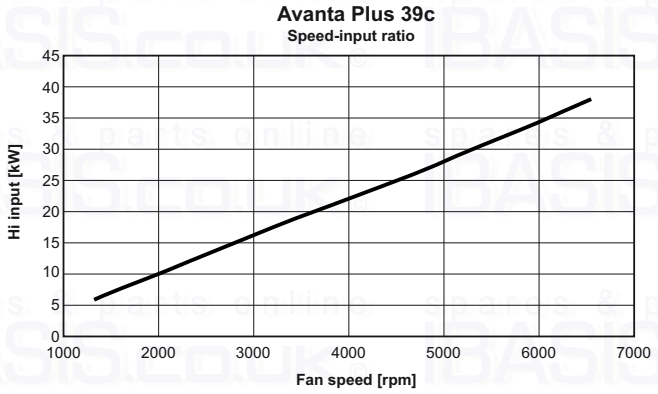

The speed-input ratio figure for Avanta Plus 30s, 35c are equal to 39c.

fig. 47 Fan speed / boiler input ratio Avanta Plus 39c

LT.AL.W7H.000.051

2.9.10 *Restore factory settings*

The factory settings can be restored in the service level as follows:

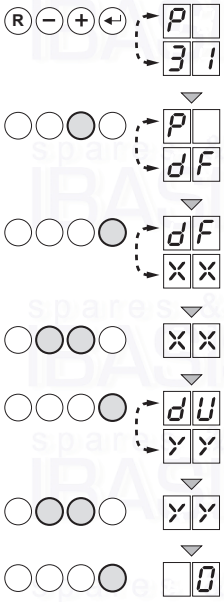

1. After parameter P31 has shown, press the **[+]**-key**;** dF and XX appear alternately;
2. Press ↵-key; XX appears;
3. Read boiler identification plate for value of dF ; press **[+]** or **[-]** key to reach this value;
4. Press ↵-key to confirm; dU and YY appear alternately;
5. Read boiler identification plate for value of dU ; press **[+]** or **[-]** key to reach this value;
6. Press ↵-key to confirm; boiler restarts with original factory settings.

fig. 48 Restore factory settings

LT.AL.W7H.000.052

2.10 Putting the boiler out of operation

The boiler must be switched off and allowed to cool down before any maintenance or repairs are carried out. If the central heating system is not going to be used for a long time (during the holidays, for instance, or frost-free periods) it is advisable to put the boiler out of operation.

2.10.1 *Boiler with frost protection, during longer periods of non-use*

- Set the room thermostat to a low temperature, e.g. 10°C;
- Switch setting P4 to 1 (hot water pre-heat) will switch off this function.

Now the boiler will only start working to protect itself against freezing.

With external frost protection, the boiler can also prevent the central heating system from freezing.

2.10.2 *Boiler without frost protection, during longer periods of non-use*

- Turn time clock off and allow system to cool down then isolate mains power supply at the fused spur unit.
- Isolate the gas supply at the boiler valve.

⚠

Drain the boiler and central heating system if you will not be using the home for a long period and there is a chance of night frost.

3 INSPECTION AND MAINTENANCE

The Remeha Avanta Plus is practically maintenance free but should be inspected annually.

☞
If during the annual inspection the flue gas analysis indicates that the values are outside the figures given *in table 11*, maintenance work should be carried out as described in *par.3.2.* Also carry out maintenance if the ionisation read-out value is lower than 3 or higher than 9µA.

Only Remeha spare parts/materials should be used.
All service and maintenance must be carried out by a qualified Engineer with the relevant training and certification (i.e. ACS - IEE registrations etc).

3.1 Inspection

The annual inspection of the Remeha Avanta Plus can be limited to the following checks:
- check the water pressure, *see par. 3.1.1;*
- check the flue pipes and air supply pipes for leaks, *see par. 3.1.2.;*
- check and clean (if necessary) the condensate siphon, *see par.0.;*
- check the ignition electrode and ionisation, *see par. 0;*
- check the combustion and flame pattern, *see par. 3.1.5;*
- Fill in the Benchmark Service Record on the inside back pages of this document.

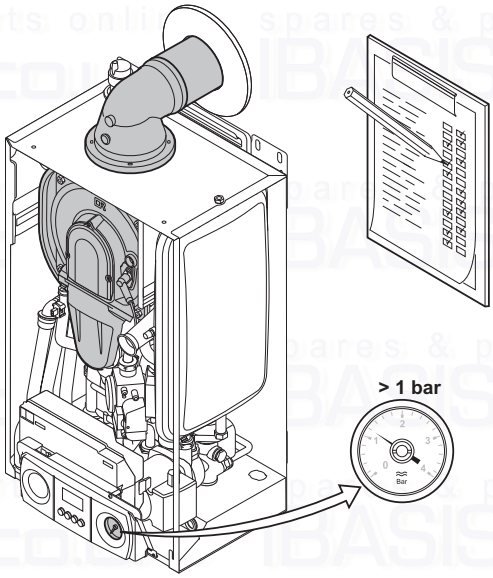

fig. 49 Annual inspection

112952.LT.GB.W7H.053

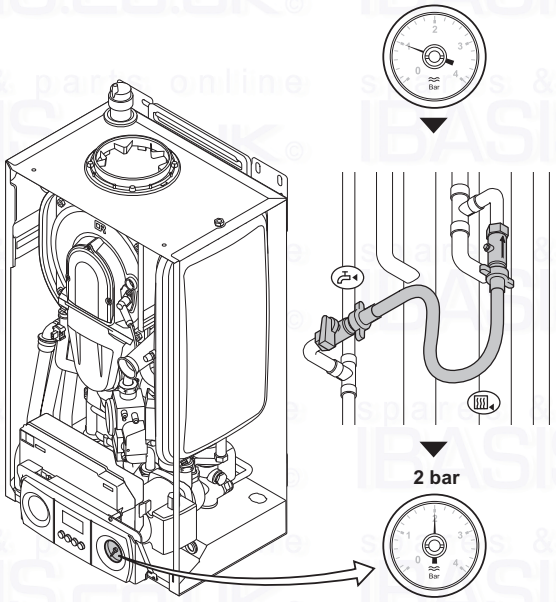

fig. 50 Checking the water pressure

112952.LT.GB.W7H.054

3.1.1 Checking the water pressure

The water pressure should be checked against the commissioning entry located on the inside back of this document (min 1 bar).

- If necessary, re-fill system to design pressure and re-set red pointer to match fill pressure 2 bar.

☞ Check system for leaks if the system needs re-filling more than 3 times per year.

3.1.2 Checking the flue pipes and air supply pipes for leaks

- Check that the flue and air-supply connections and pipes are sealed and the terminal exit is clear.

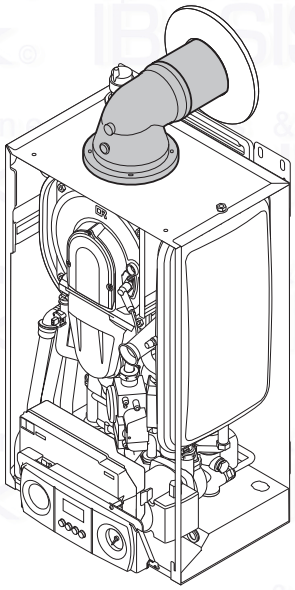

fig. 51 Checking flue pipes

112952.LT.GB.W7H.055

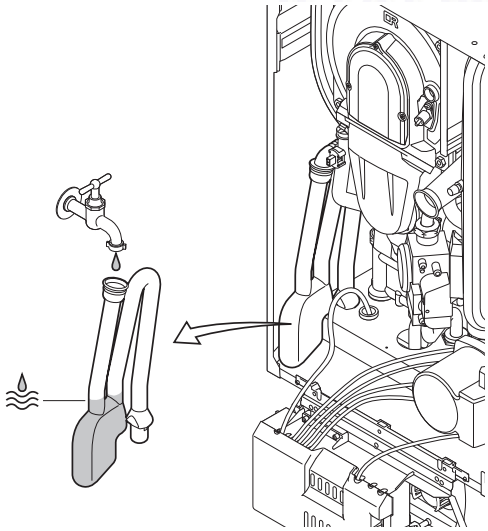

fig. 52 Checking siphon

T001775

3.1.3 Checking the condensate siphon

- Check the condensate siphon. Remove any dirt residues and refill with clean water to the mark.

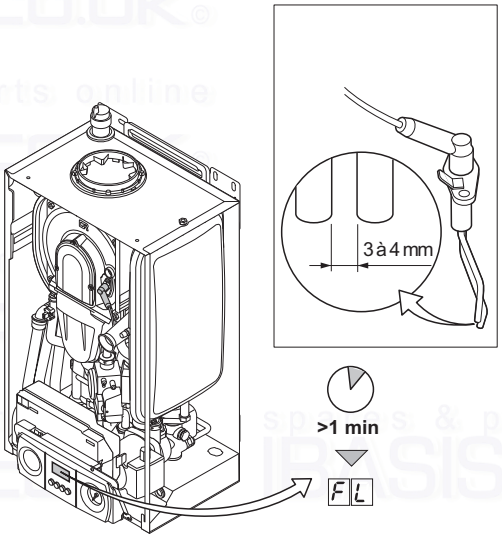

fig. 53 Checking the ignition electrode

112952.LT.GB.W7H.056

3.1.4 Checking the ignition electrode

- Check the ionisation /ignition electrode for:
- deposits (remove any white deposits with abrasive cloth);
- the adjustment of the ignition electrode (between 3 and 4 mm);
- the quality of the gasket and condition of the porcelain (this should not be cracked);
- Check the ionisation current after 1 minute on the display code FL, *see par. 2.9.6.*

If the read-out value is lower than 3 or higher than 9µA, check cable and connections are sound if OK replace the ignition electrode.

☞ The ignition cap is fixed on the ignition electrode and therefore cannot be removed.

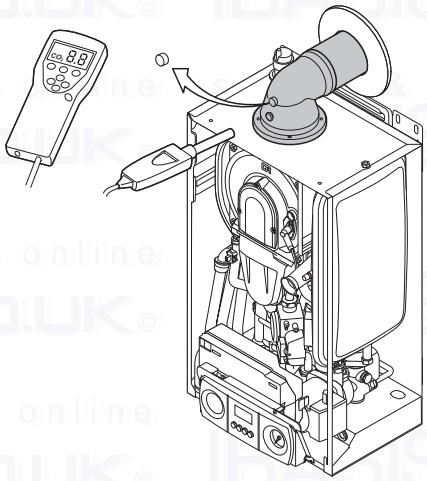

fig. 54 Checking the combustion

112952.LT.GB.W7H.057

3.1.5 Checking the combustion

- Measure the O_2/CO_2 percentage and the flue gas temperature at the flue gas sample point.

Do this as follows:
- heat the water temperature in the boiler to approx. 70°C;
- unscrew the top of the flue gas point of measurement;
- measure the O_2/CO_2 percentage and compare this to the check values in *table 11.*

☞ Ensure that the analysing probe has a gas tight seal in the sampling point with the probe end in the centre of the flue duct.

Checking values O_2/CO_2 for natural gas H / L				
Boiler-type	Fan speed (rpm)		O_2	CO_2
	Full load H 3	Part load L 3	%	%
18s	approx. 3500	approx. 1300	5.2 ± 0.2	8.8 ± 0.3
24s	approx. 4300	approx. 1300	5.2 ± 0.2	8.8 ± 0.3
30s	approx. 5200	approx. 1300	5.2 ± 0.2	8.8 ± 0.3
24c	approx. 4400	approx. 1300	5.2 ± 0.2	8.8 ± 0.3
28c	approx. 5500	approx. 1300	5.2 ± 0.2	8.8 ± 0.3
35c	approx. 6300	approx. 1300	5.2 ± 0.2	8.8 ± 0.3
39c	approx. 6700	approx. 1300	5.2 ± 0.2	8.8 ± 0.3

table 11 Checking values O_2/CO_2 (front panel not fitted)

Checking values O_2/CO_2 for LPG (propane)				
Boiler-type	Fan speed (rpm)		O_2	CO_2
	Full load H 3	Part load L 3	%	%
18s	approx. 3300	approx. 2000	5.1 ± 0.2	10.5 ± 0.3
24s	approx. 4100	approx. 2000	5.1 ± 0.2	10.5 ± 0.3
30s	approx. 5000	approx. 2000	5.1 ± 0.2	10.5 ± 0.3
24c	approx. 4300	approx. 2000	5.1 ± 0.2	10.5 ± 0.3
28c	approx. 5200	approx. 2000	5.1 ± 0.2	10.5 ± 0.3
35c	approx. 5800	approx. 2000	5.1 ± 0.2	10.5 ± 0.3
39c	approx. 6500	approx. 2000	5.1 ± 0.2	10.5 ± 0.3

table 12 Checking values O_2/CO_2 (front panel not fitted

The O_2/CO_2 - values *in table 11* and *table 12* are **checking** values. For **setting** values see *table 05 and table 07.*

If the flue gas analysis readings are within the values *in table 11* or *table 12* the boiler combustion is OK. However if the readings are outside the given values, then adjust the gas air ratio control to the given values, *see table 05 and table 07 in par.2.9.3*.

If the adjustments cannot achieve the mentioned values, the boiler will require a full service please refer to the maintenance instructions in *par. 3.2.*

- check the flame via the inspection glass; in full load the flame should be stable with an even blue colour and in part load should be stable with an even orange colour.

After servicing, complete the relevant Service Interval Record section of the Benchmark Checklist located on the inside back pages of this document.

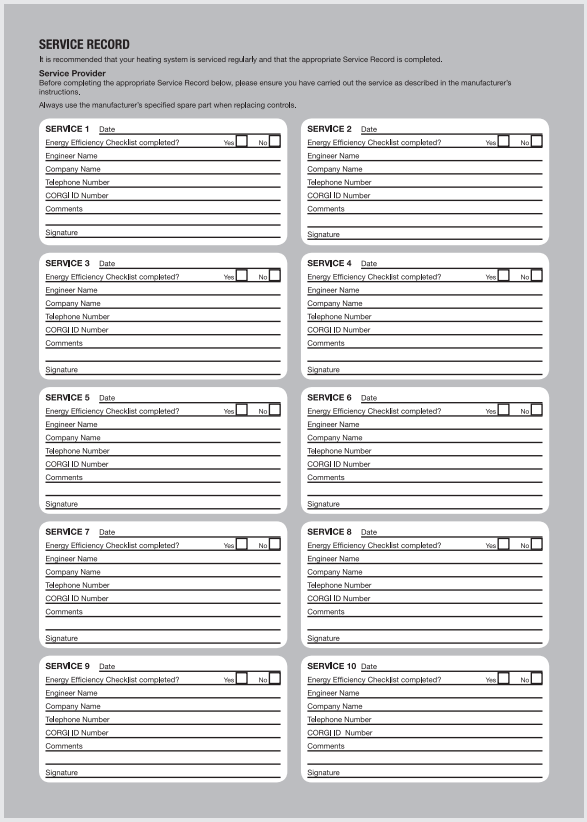

SERVICE RECORD

It is recommended that your heating system is serviced regularly and that the appropriate Service Record is completed.

Service Provider

Before completing the appropriate Service Record below, please ensure you have carried out the service as described in the manufacturer's instructions.

Always use the manufacturer's specified spare part when replacing controls.

SERVICE 1 Date
Energy Efficiency Checklist completed? Yes ☐ No ☐
Engineer Name
Company Name
Telephone Number
CORGI ID Number
Comments
Signature

SERVICE 2 Date
Energy Efficiency Checklist completed? Yes ☐ No ☐
Engineer Name
Company Name
Telephone Number
CORGI ID Number
Comments
Signature

SERVICE 3 Date
Energy Efficiency Checklist completed? Yes ☐ No ☐
Engineer Name
Company Name
Telephone Number
CORGI ID Number
Comments
Signature

SERVICE 4 Date
Energy Efficiency Checklist completed? Yes ☐ No ☐
Engineer Name
Company Name
Telephone Number
CORGI ID Number
Comments
Signature

SERVICE 5 Date
Energy Efficiency Checklist completed? Yes ☐ No ☐
Engineer Name
Company Name
Telephone Number
CORGI ID Number
Comments
Signature

SERVICE 6 Date
Energy Efficiency Checklist completed? Yes ☐ No ☐
Engineer Name
Company Name
Telephone Number
CORGI ID Number
Comments
Signature

SERVICE 7 Date
Energy Efficiency Checklist completed? Yes ☐ No ☐
Engineer Name
Company Name
Telephone Number
CORGI ID Number
Comments
Signature

SERVICE 8 Date
Energy Efficiency Checklist completed? Yes ☐ No ☐
Engineer Name
Company Name
Telephone Number
CORGI ID Number
Comments
Signature

SERVICE 9 Date
Energy Efficiency Checklist completed? Yes ☐ No ☐
Engineer Name
Company Name
Telephone Number
CORGI ID Number
Comments
Signature

SERVICE 10 Date
Energy Efficiency Checklist completed? Yes ☐ No ☐
Engineer Name
Company Name
Telephone Number
CORGI ID Number
Comments
Signature

fig. 55 Benchmark Checklist

T002020

3.2 Maintenance

To conduct maintenance:

☞ Ensure that a service gasket set and new ignition/ionisation electrode is available before carrying out this procedure.

⚠
- Isolate power supply at the fused spur before carrying out any work on the boiler.

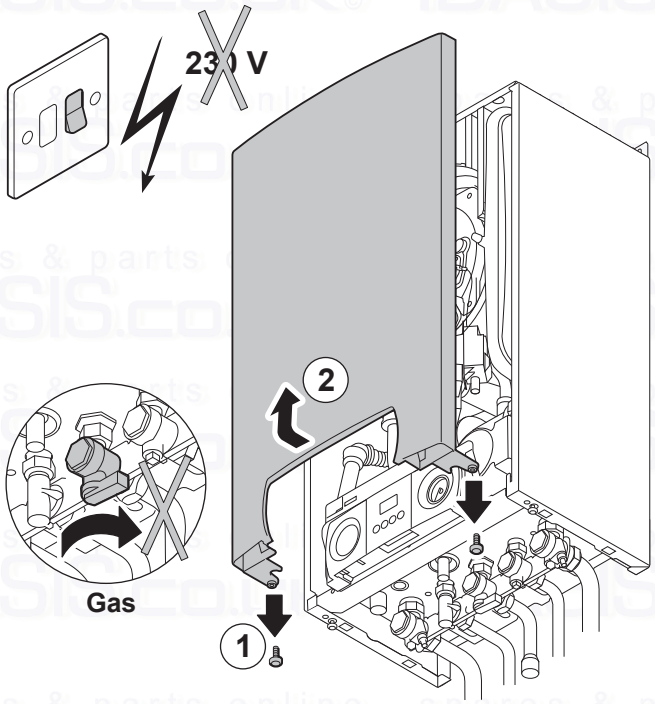

fig. 56 Open the boiler

LT.AL.W7H.000.058

1. Open the boiler

- Isolate the 230 V supply at the switched spur and remove the fuse
- Isolate the gas supply at the boiler gas valve
- Remove the front panel (release the two screws at the bottom of the front panel, pull the bottom of the panel forward and lift off the two pins on the top of the main casing).

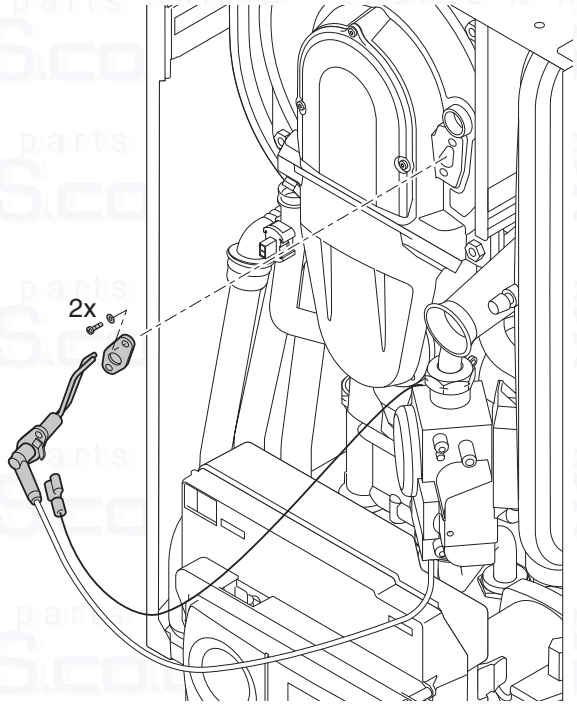

fig. 57 Maintenance the electrode

LT.AL.W7H.000.059

2. Maintenance of the ignition/ionisation electrode

- Disconnect the earth wire from the electrode mounting plate.
- Release the two screws on the electrode and remove the assembly.
- Inspect, clean re-gap or replace the electrode, *see par 0*.

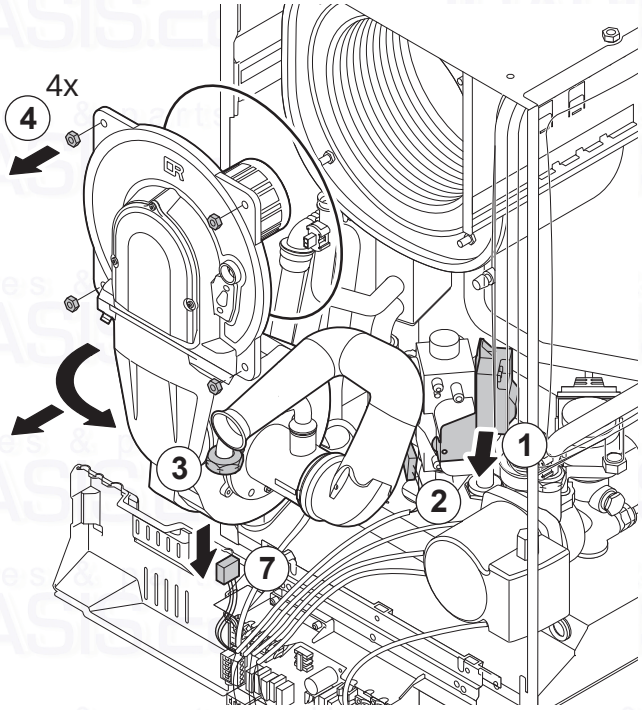

fig. 58 Dismantling the front plate of the heat exchanger

LT.AL.W7H.000.060

3. Dismantling the front plate of the heat exchanger

- Release the ignition transformer mounting plate and remove it completely.
- Disconnect the electrical connection on the gas block.
- Release the union nut from the gas pipe on the outlet to the gas block.
- Release the four nuts on the heat exchanger front plate
- Carefully pull the front plate assembly c/w fan, gas block, venturi pipe and burner unit away from the heat exchanger by approx. 10 cm.
- Disconnect the electrical plug on the back of the fan, so it becomes accessible.
- Remove the front plate assembly completely.

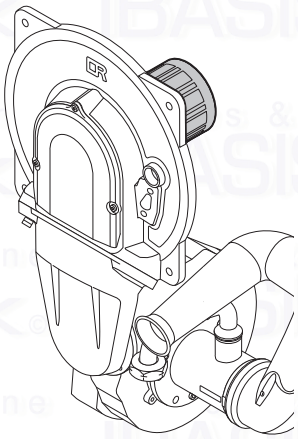

fig. 59 Checking the burner

LT.AL.W7H.000.061

4. Maintenance to the burner

- Carefully clean the burner with pressured air (do not keep the nozzle to close to the surface).
- Visual inspection of the burner for any damages or cracks on the surface. If you see any damages, then replace the burner.

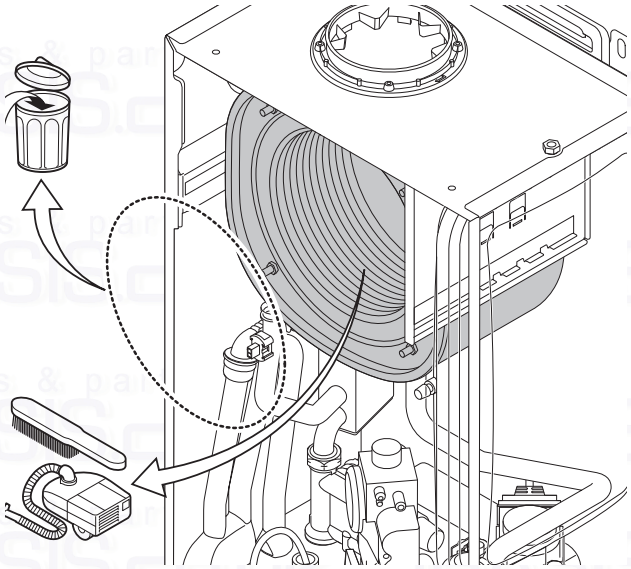

fig. 60 Maintenance to the heat exchanger

112952.LT.GB.W7H.062

5. Maintenance to the heat exchanger (CH)

- Check the seal between the front plate and the heat exchanger and the insulation section. Replace sealing.
- Handle the fragile front-plate insulation and the back-plate insulation of the heat exchanger with great care and do not let them get wet.
- Visual inspection of the heat exchanger for scale or dirt. If you see obvious deposits, than clean the heat exchanger carefully. Carefully remove any loose dirt with a vacuum cleaner.
- Then brush the coils of the heat exchanger (if required a cleaning brush is available as an accessory) and remove the loosened particles with a vacuum cleaner.

6. Cleaning plate heat exchanger (DHW) and non return valve with filter

Scale deposits on the plate heat exchanger cannot be totally excluded, depending on such variables as tap water quality and operation mode.

We recommend annual inspections under standard circumstances. Please note that following factors may influence the frequency of inspection:

- Water hardness
- Chemical composition of scale deposit
- Boiler operation hours
- DHW usage pattern
- DHW set temperature

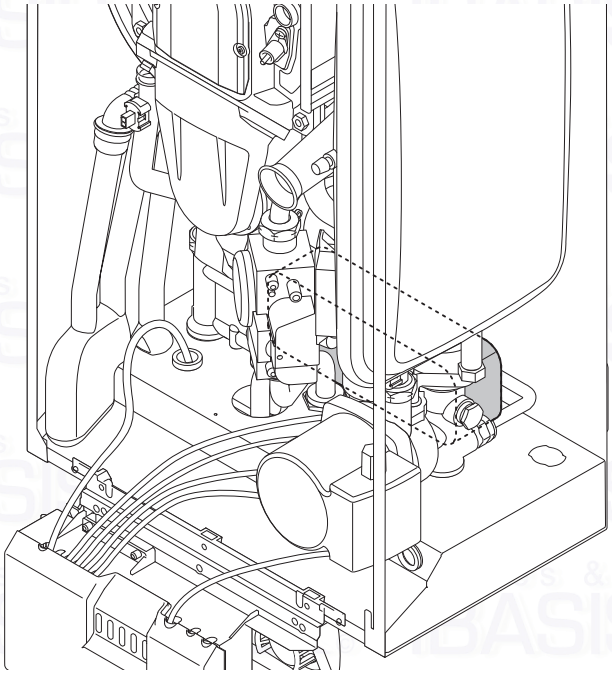

If a cleaning operation becomes necessary, please proceed as follows:

- Turn off the mains cold water supply and drain off the residual DHW;
- Release two socket head screws and remove plate heat exchanger
- Clean plate heat exchanger with scale solvent (e.g. citric acid, pH 3); a special cleaning tool (optional accessory) can be used;
- Thoroughly cleaning afterwards with clean water;
- Remove non return valve with filter from on the right hand side of the hydro block and also clean with the scale solvent; afterwards thoroughly cleaning with clean water.

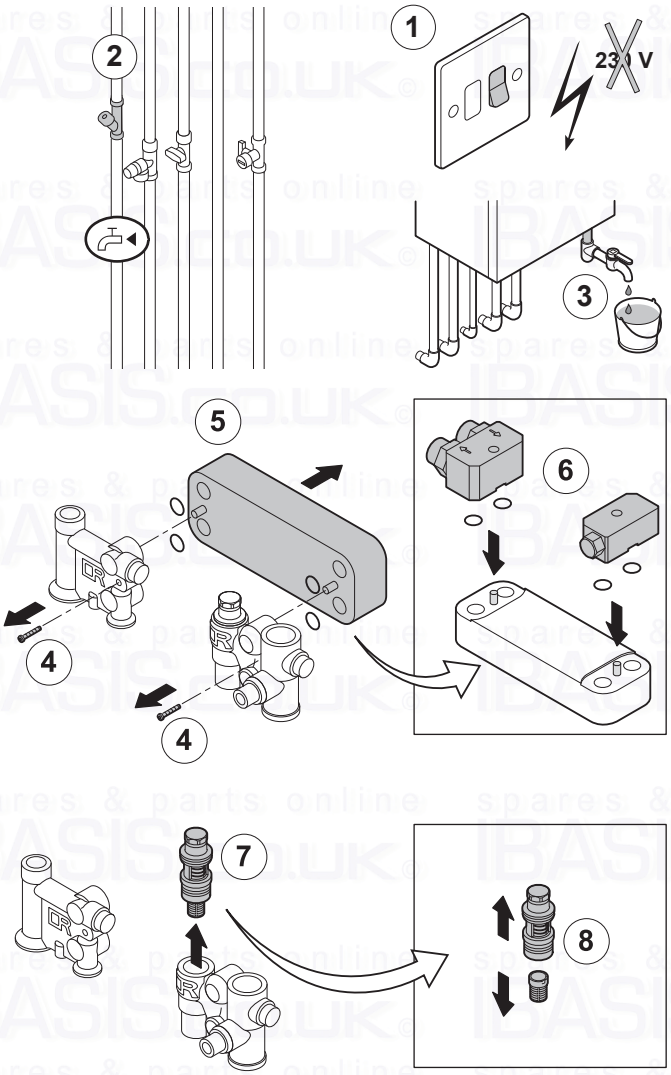

fig. 61 Cleaning plate heat exchanger and non return valve with filter.

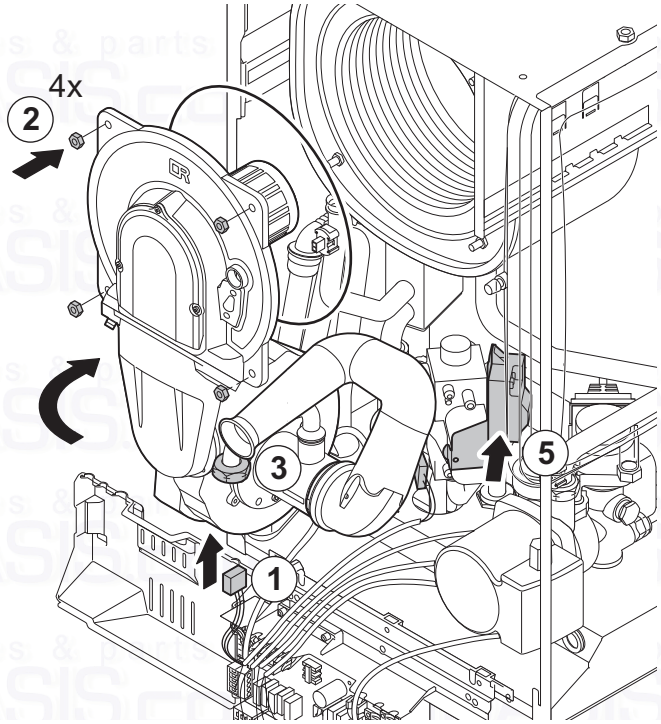

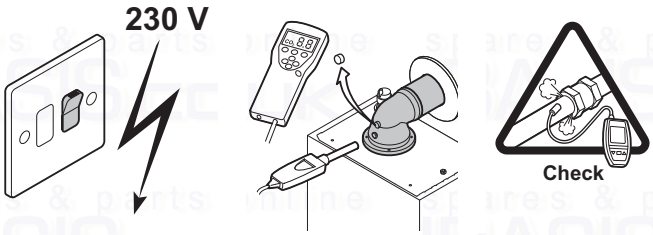

fig. 62 Assembling the boiler

112952.LT.GB.W7H.063

7. Re-Assembling the boiler and checking the combustion

- Re-assemble all the components in reverse order.

☞
- Check that the packing between the front plate and the heat exchanger has been fitted correctly.

- Fill the system with water.
- Switch the boiler back on.
- Check the CO_2/O_2-percentage, *2.9.3, point 4.*
- Check the ionisation current by reading the display, *see par.0*
- Check the connections on the gas block on gas-leaking.

☞
Fill in the Benchmark Service Record on the inside back pages of this document, after conducting any maintenance.

4 ERRORS

4.1 General

The Remeha Avanta Plus has an advanced control unit. The heart of this control unit is a microprocessor, the **abc**®-control which both controls and protects the boiler. If an error is detected anywhere in the boiler, it will lock-out and an error code will appear in the display.

4.2 Error codes

The Remeha Avanta Plus displays the error codes as follows: E 2 (the display alternately shows an E and a number e.g. 2)
The meaning of the various error codes can be found in the error table, *see table 13.*

How to deal with errors:

- Make a note of the displayed error code.

The error code is important for the correct and swift detection of the nature of the error and for possible support from our technical help line 0118 978 3434.

- Press the 'reset' key for 3 seconds. If the error code continues to appear, look for the cause in the error table below and resolve it.

Error code	Description	Possible cause	Check / solution
E0	Flow or return sensor fault.	Short circuit in the flow, return or boiler temperature sensor.	Check the wiring and the connections of the sensors visually: are the plugs all correctly in position? With a multimeter: measure the resistance in the wiring and connection.
		Defective or not (properly) connected flow, return or boiler temperature sensor.	Check that the sensors are working; take the sensors out * and measure the resistance with a multimeter at room temperature (20 - 25°C); the sensor is working properly if the resistance is between 12 and 15 kΩ.
E1	Flow temperature is higher than the set maximum temperature	Insufficient water.	Check the minimum water pressure, read off the gauge.
		No through flow.	Check that the pump is working; turn the spindle with a screwdriver, if that works but the pump still does not respond, check the wiring; if that is in order the pump is faulty.
		Too much air in the system.	Vent the system.
		Deviation in the flow or return temperature sensor.	Check that the sensors are working; take the sensors out * and measure the resistance with a multimeter at room temperature (20 - 25°C); the sensor is working properly if the resistance is between 12 and 15 kΩ.
E2	Return temperature is higher than the flow temperature	Insufficient water.	Check the minimum water pressure, read off the gauge.
		No through flow.	Check that the pump is working; turn the spindle with a screwdriver, if that works but the pump still does not respond, check the wiring; that is in order the pump is faulty.
		Too much air in the system.	Vent the system.
		Sensors not wired correctly	Check the wiring between sensors and control unit.
		Deviation in the flow or return temperature sensor.	Check that the sensors are working; take the sensors out * and measure the resistance with a multimeter at room temperature (20 - 25°C); the sensor is working properly if the resistance is between 12 and 15 kΩ.
E3	Control unit or earth fault	Mains supply not correctly earthed. Control unit faulty.	Check that the power supply from the switch spur is properly earthed, if that is the case the control unit is faulty.

Error code	Description	Possible cause	Check / solution
E4	More than 5 start attempts without any flame formation.	No ignition spark.	Check: • the connection between the ignition wire and the ignition trafo; • the ignition wire and electrode for 'dielectric breakdown'; • the inter-electrode distance, this should be 3-4 mm; that the ignition electrode is properly earthed.
		A spark but no flame.	Check that: • the gas tap is open; • the gas pre-pressure is sufficient; • the gas pipe is de-aerated; • the gas valve is energised during ignition and opens; • the electrode is correctly fitted and clean; • the CO_2 adjustment at low and full load; • there is no obstruction / fitting fault in the gas pipe; • there is no obstruction in the air supply or flue (e.g. a blocked siphon); there is no recirculation of flue gasses (either inside or outside the boiler).
		There is a flame but no, or insufficient ionisation (lower than 3 or higher than 9 µA)	Check: • the flame, is the heart of the flame visible and the flame stable? • the CO_2 adjustment at low and full load; • that the ignition electrode is correctly earthed; • visual check of the ignition/ionisation electrode: look for white oxide film (remove with sandpaper or a screwdriver); look at the shape (are the pins still the original shape and is the distance between the two ends of the pins between 3 and 4 mm).
E5	No ionisation or ionisation failure more than 5 times during one heat demand.	CO_2 wrongly adjusted	Check: • CO_2 adjustment on the gas block; • ignition/ionisation pin; • flue/air-supply connections; • gas flow at full load; • if there is no recirculation of flue gasses (either inside or outside the boiler).
E6	Unwanted flame formation		Faulty control unit, replace control unit.
E7	No water in the boiler or the pump is not working	Insufficient water.	Check the minimum water pressure, read off the gauge and check for leaks.
		No through flow.	Check that the pump is working; turn the spindle with a screwdriver, if that works but the pump still does not respond, check the wiring; that is in order the pump is faulty.
		Too much air in the system.	Vent the system.
		Wrong pump wiring.	Check wiring from and to control unit.
E8	Fan fault	Fan is not working	Check: • fan function; • fan wiring and connection.
		Fan does not stop	Check: • fan function; • fan wiring and connection; • excess chimney draught.
E10	No through flow during venting cycle	Insufficient water.	Check the minimum water pressure, read off the gauge and check for leaks.
		No through flow	Check that the pump is working; turn the spindle with a screwdriver, if that works but the pump still does not respond, check the wiring; that is in order the pump is faulty.
		Too much air in the system.	Vent the system.
		Wrong pump wiring.	Check wiring from and to control unit.
E11	Air box temperature to high	Air leakage from heat exchanger to air box	Check: • The sealing of the viewing glass; • Whether front plate of heat exchanger is properly tightened • Front plate sealing; • Whether ignition electrode is properly fitted
E13	Heat-exchanger fuse protection has responded; replace the heat exchanger after finding and solving the cause.	Heat exchanger faulty.	Check wiring between heat exchanger fuse.
		Insufficient water.	Check the minimum water pressure, read off the gauge and check for leaks.
		No through flow.	Check that the pump is working; turn the spindle with a screwdriver, if that works but the pump still does not respond, check the wiring; that is in order the pump is faulty.

Error code	Description	Possible cause	Check / solution
E43	Parameter limits	Automation settings	Replace dF / dU settings, *see Par. 2.9.10* If this error code still returns after resetting; please contact Broag.
E44	Parameter check	Automation settings	Replace dF / dU settings, *see Par. 2.9.10* If this error code still returns after resetting; please contact Broag.
E45	Default parameters	Automation settings	Replace boiler control unit.

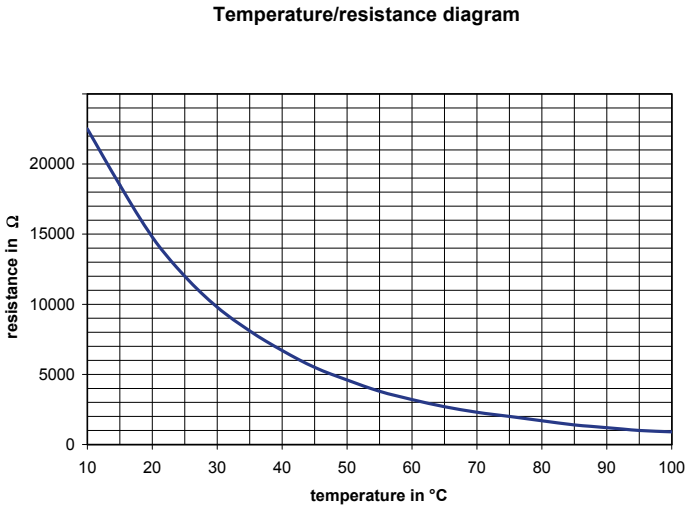

fig. 63 Sensor resistance graph

Sensor resistance

table 13 Error codes

* When sensors have been taken out, be sure to replace them max. 40 mm underneath heat exchanger.

If you read out a not listed error, please report to Broag.

4.3 Control stop or lock-out

The code d8 , d5 or d9 can appear in the display.

- Code d8 is a control stop and will appear if the measured flow temperature (t1) is higher than the flow temperature set (Tset flow). The boiler will start working again automatically once the flow temperature falls below the flow temperature set.
- Code d5 is a control stop from 3 till 10 minutes and appears if the set flow temperature (t1) has already been reached and the heating demand still exists.
- Code d9 is a shut down and appears if the maximum temperature rise is exceeded or if the dT between the supply and return temperature ≥ 45°C or a rate of rise in the flow temperature > 1°C/sec. And also at a boiler-start with no through flow or insufficient water. The boiler will try to restart after 10 minutes.

☞

Every 10 minutes the boiler will try to restart until the cause has been removed.

- Code d9 is a shut down and can appear in the following situation:
  - the lock-out down input (between connectors 5 and 6 on terminal block X9) has been activated (= opened).

☞

The shut down will disappear once the cause has been removed!

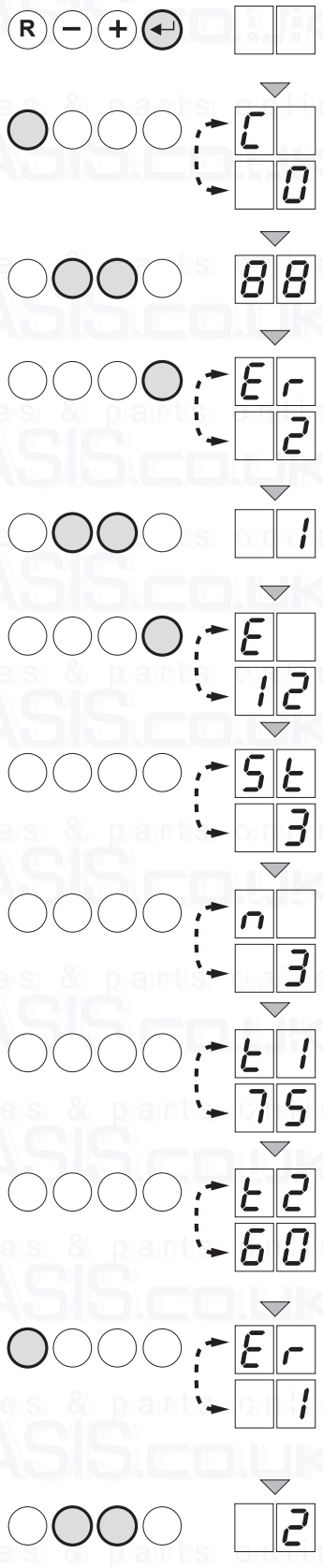

fig. 64 Error read outs

LT.AL.W7H.000.064

4.4 Error memory

The Remeha Avanta Plus control unit has an error memory, in which the last 16 errors are stored. In addition to the error code (é and a number xx).
The following data is also stored:

- the number of times the error occurred (n and a number xx)
- the operating status of the boiler (5t and a number xx)
- the flow temperature (t1 and the value xx) return temperature (t2 and the value xx) at the time the error occurred.

To get access to the error memory, access code must be entered.

4.4.1 Error read outs

- Press the [enter]-key and keep it pressed;
- Press the [reset]-key until codes c and 0 appear alternately in the display;
- Enter the special access code 88 with the [+] or [-]- key;
- Press the [enter]-key; the display shows ér and the number of the last error alternately, for example 02.
- Press the [+] or [-]-key to go forwards or backwards in the list of errors.
- Press the [enter]-key to take a closer look ot the error. The display shows the error code as follows;
  - first error code é with error number e.g. 12
  - then status code 5t with status number e.g. 3 (burning for central heating)
  - then number of time that the error has occurred ñ and a number e.g. 3
  - then the flow temperature when the error occurred t1 and temperature e.g. 75
  - final the return temperature when the error occurred t2 and temperature e.g. 60

This cycle continues to repeat itself.

- Press the [reset]-key to stop the cycle; the following appears in the display;
  ér and the last viewed errors e.g the numbers 1 and 8.
- Press the [+] or [-]-key to look at the following error data.

4.4.2 Deleting errors

The last message in the list, Er followed by cl will appear in the display;

- Press the [enter]-key again, and the following will appear in the display: 0
- Press the [+]-key to set the parameter to 1.
- Press the [enter]-key, to delete the error memory:
- Press the [escape]-key twice to exit the error memory.

When tracing an error, the cause can often be found more quickly if the operating status at the time the error occurred can be retrieved from the error memory.

5 SERVICE PARTS

5.1 General

If, following the annual inspection or maintenance any part of the boiler is found to need replacing, use Remeha spare parts only or spare parts and materials recommended by Remeha.

If any component is to be replaced and it is covered by the terms and condition as described in the warranty leaflet, return the faulty component to Broag-Remeha with the details as show in table 14

Your reference		Date	
Customer			
Name			
Address			
City			
Post Code			
Contact person			
Telephone			

Part. no.	Description	Boiler serial nr.*	Model	Installation date	Problem description	Reference

table 14 Return form example

* These details can be found on the boiler type plate; the type plate is fixed to the bottom of the boiler.

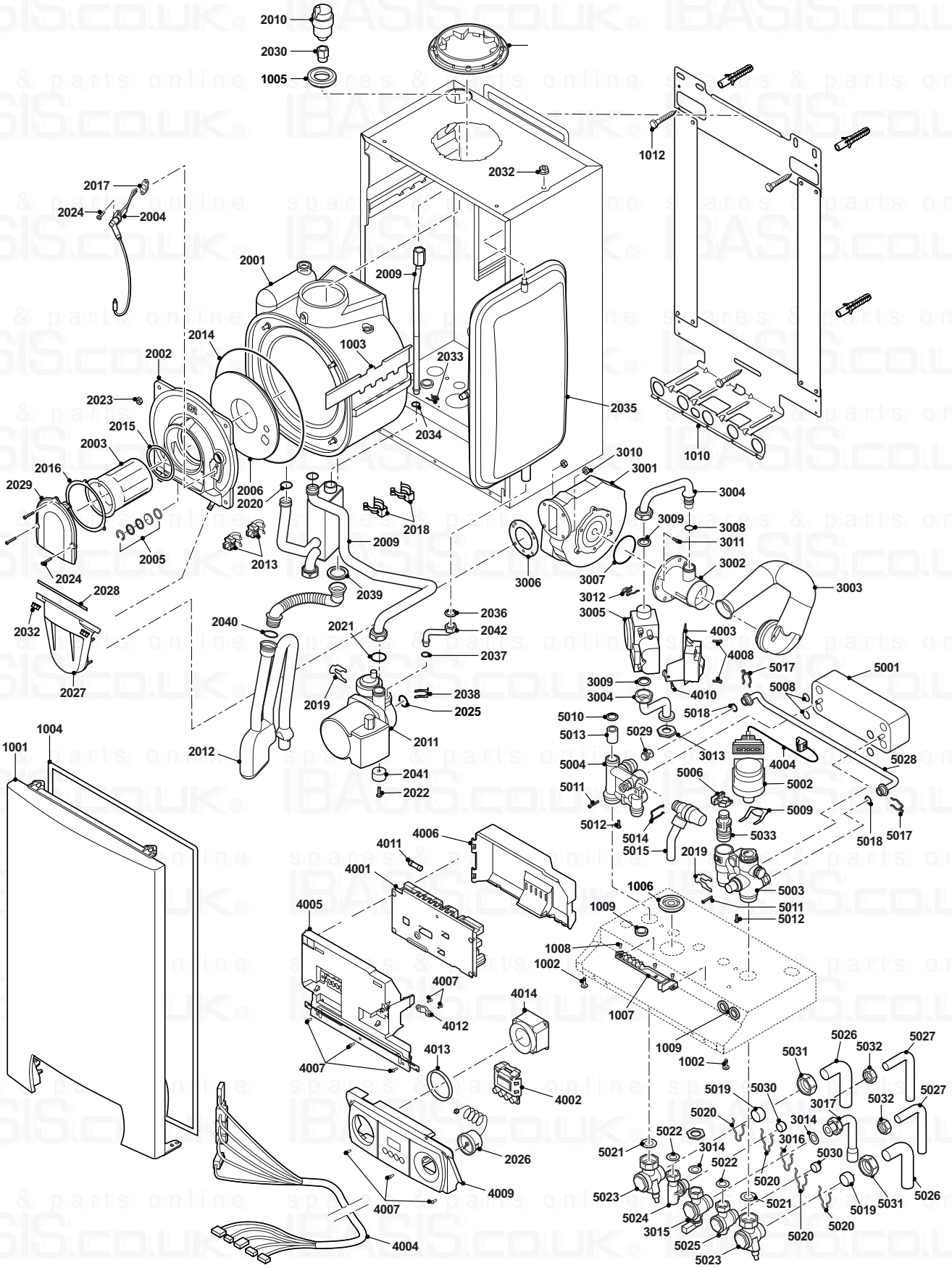

fig. 65 Exploded view Remeha Avanta Plus (combi)

Break down parts kit		
Part No	**Description**	**Position**
S62743	Electrode ignition/ionisation	2004
S62728	Vent auto air bleed device	2010
S62746	Pump for 18s, 24s, 30s, 24c and 28c	2011
S62747	Pump for 35c and 39c	2011
S58733	Sensor temperature (2 pcs.)	2013
S62733	Gauge pressure c/w capilliary	2026
S58684	Fan assembly 24VDC	3001
S58685	Gas combination block	3005
S62734	Control board	4001
S62739	Display print board	4002
S62750	Transformer ignition	4003
S43561	Fuse glass 2 amp slow (10 pcs.)	4011
S59132	Actuator three way valve	5002
S59133	Sensor DHW flow	5006
S62763	Safety pressure relief valve with pipe	5015
S62781	Flowswitch + hall sensor	5033

table 15 Break down parts kit

6 EC DECLARATION

EC – DECLARATION OF CONFORMITY

Manufacturer	: Remeha B.V.
Address	: Kanaal Zuid 110
Town, Country	: Postbus 32, NL-7300 AA Apeldoorn
- hereby declares that the appliance(s)	: Remeha Avanta Plus

comply / complies with the specifications of the following EEC directives:

EEG Directive:	90/396/EEG	applied standards:
		(pr)EN 297(1994), 483(1999), 625(1995), 677(1998)
	73/23/EEG	(pr)EN 50165(1997), 60335-1(1994)
	92/42/EEG	
	89/336/EEG	EN 50165(1997), 55014-1(2000), 55014-2(1997) EN 61000-3-2(2000), 61000-3-3(1995)
	97/23/EG(Art.3, sub 3)	

Apeldoorn, July 2005

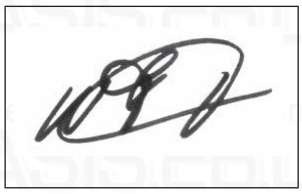

W.F. Tijhuis
Approval Manager

7 REGULATIONS

7.1 EC regulations

The boiler meets the requirements of the EC regulations at the following directives:

- 90/396EEC Gas appliances directive
- 92/42/EEC Efficiency directive
- 73/23/EEC Electrical low voltage directive
- 89/336/EEC EMC directive
- 97/23/EEC Pressure equipment directive (art. 3, sub. 3)

Classification type for evacuation of the combustion products; according EN 483

7.2 Remeha factory test

Before it leaves the factory, each Remeha Avanta Plus boiler is optimally adjusted and tested for:

- electrical safety;
- CO2- adjustment;
- hot water function
- water tightness;
- gas tightness;
- automation parameters.

7.3 Additional guidelines

In addition to the regulations and guidelines as mentioned in par.*7.1* the following guidelines in this documentation should also be observed.

It applies for all regulations and guidelines, mentioned in this Installation and Service manual, that any additions or new regulations and guidelines at the time of installation will also apply.

8 TECHNICAL SPECIFICATIONS AND WORKING PRINCIPLE

8.1 Technical data

Appliance type Remeha Avanta Plus		**24c combi**	**28c combi**	**35c combi**	**39c combi**
General					
Gas council numbers	-	41-288-01	47-673-02	47-673-03	47-673-04
Boiler control		modulating or on/off			
Nominal output **Pn** (80/60°C) (CH)	kW	20.0	21.6	29.4	33.3
Nominal output **Pn** (50/30°C) (CH)	kW	21.6	23.0	31.3	35.5
Nominal input **Qn** Hi	kW	5.8 - 21	5.8 - 22	6.1 - 30	6.3 - 34
Nominal input **Qnw** Hi	kW	24.0	28.0	35.0	39.0
Assembly dry weight	kg	30.5	30.5	32	34.5
Noise level at distance of 1m from the boiler (at full load)	dB(A)	< 44			
Gas and flue details					
Classification due to discharging flue gases	-	C13, C33, C53, C83			
Gas type permitted	-	$II_{2H\ 3P}$ (natural gas and propane) *			
Gas inlet pressure natural gas	mbar	20 - 30			
Gas consumption natural gas maximum	m_n^3/h	2.5	3.0	3.5	3.9
Gas flue rate	kg/h	40	47	57	62
Gas inlet pressure propane	mbar	37 - 50			
Gas consumption propane maximum	m_n^3/h	1.0	1.2	1.3	1.6
NO_x Class [2])	-	5 [1])			
NO_x emissions @ 0% excess 02	mg/kW	37	37	38	39
Residual fan duty (full load)	Pa	50	100	100	140
CH side					
Water capacity heat exchanger and piping	l	1.8	1.8	2.0	2.2
Expansion vessel size	l	8			
Minimum operating water pressure	bar	1			
Maximum operating water pressure **PMS**	bar	2.5			
Water temperature maximum	°C	110			
Operating temperature maximum	°C	95			
Residual head ΔT = 20°C	mbar	> 250	> 250	> 250	> 200
Domestic hot water side [2])					
Tap capacity **D** (ΔT = 35°C)	l/min	10.0	11.4	14.2	15.9
Minimum tap flow	l/min	1.2	1.2	1.2	1.2
Operating pressure P_{MW} min. - max.	bar		0.5 - 8	0.5 - 8	0.5 - 8
Water resistance (nom. output) incl. flow restrictor	bar	1.3	1.3	-	-
Water resistance (nom. output) excl. flow restrictor	bar	0.1	0.1	0.1	0.1
Electrical					
Main supply	V/Hz	230 / 50			
Power consumption **W** maximum	W	115	115	150	180
in stand-by status	W	< 3			
Degree of protection	IP	X4D			

table 16 Summary of technical data

[1]) Measured according EN 483, EN 15420 (EN 297 A3) (Class 5 complies with a limited concentration of NO_x < 70 mg/kWh)

[2]) This data applies for natural gas.

* For propane a kit with restrictor is required. For type 39c a kit with restrictor and burner is needed.

Appliance type Remeha Avanta Plus		**18s system**	**24s system**	**30s system**
General				
Gas council numbers	-	41-288-11	41-288-05	41-288-12
Boiler control		modulating or on/off		
Nominal output **Pn** (80/60°C) (CH)	kW	18.0	21.6	29.4
Nominal output **Pn** (50/30°C) (CH)	kW	19.1	23.0	31.3
Nominal input **Qn** Hi	kW	5.8 - 18.3	5.8 - 22	6.1 - 30
Nominal input **Qnw** Hi	kW	-	-	-
Assembly dry weight	kg	29.0	29.0	32.0
Noise level at distance of 1m from the boiler (at full load)	dB(A)	< 44		
Gas and flue details				
Classification due to discharging flue gases	-	C13, C33, C53, C83		
Gas type permitted	-	$II_{2H\,3P}$ (natural gas and propane) *		
Gas inlet pressure natural gas	mbar	20 - 30		
Gas consumption natural gas maximum	m_n^3/h	1.9	2.3	3.2
Gas flue rate	kg/h	31	37	51
Gas inlet pressure propane	mbar	37 - 50		
Gas consumption propane maximum	m_n^3/h	0.7	0.85	1.2
NO_x Class [2])	-	5 [1])		
NO_x emissions @ 0% excess 02	mg/kW	37	37	37
Residual fan duty (full load)	Pa	50	50	100
CH side				
Water capacity heat exchanger and piping	l	1.8	1.8	2.0
Expansion vessel size	l	8		
Minimum operating water pressure	bar	1		
Maximum operating water pressure **PMS**	bar	2.5		
Water temperature maximum	°C	110		
Operating temperature maximum	°C	95		
Residual head ΔT = 20°C	mbar	> 250	> 250	> 250
Domestic hot water side [2])				
Tap capacity **D** (ΔT = 35°C)	l/min	-	-	-
Minimum tap flow	l/min	-	-	-
Operating pressure P_{MW} min. - max.	bar			
Water resistance (nom. output) incl. flow restrictor	bar	-	-	-
Water resistance (nom. output) excl. flow restrictor	bar	-	-	-
Electrical				
Main supply	V/Hz	230 / 50		
Power consumption **W** maximum	W	115	115	115
in stand-by status	W	< 3		
Degree of protection	IP	X4D		

table 17 Summary of technical data

[1]) Measured according EN 483, EN 15420 (EN 297 A3)
(Class 5 complies with a limited concentration of NO_x < 70 mg/kWh)

[2]) This data applies for natural gas.

* For propane a kit with restrictor is required.

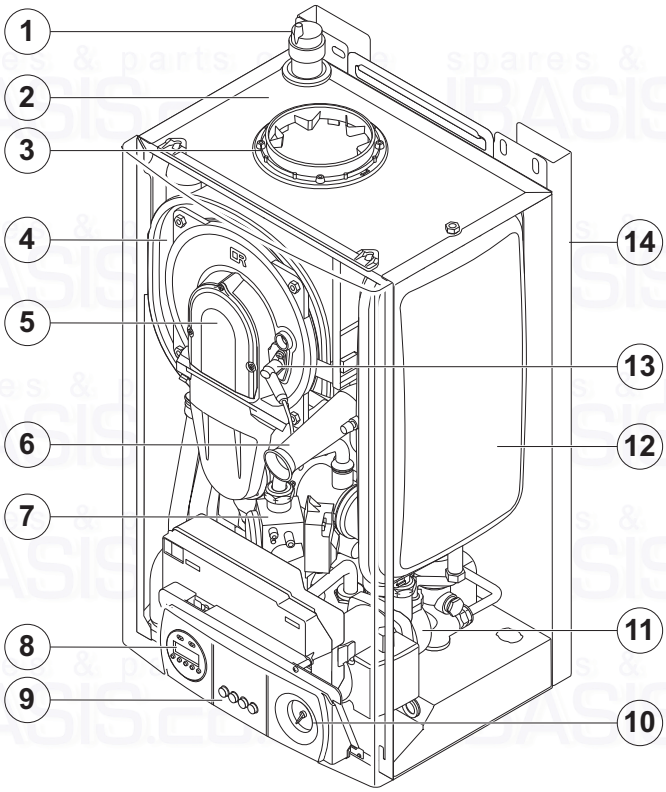

fig. 66 Components of the Remeha Avanta Plus combi

112952.LT.GB.W7H.202

8.2 The boiler components

1. *Automatic air vent*
2. *Flue / Air inlet connection*
3. *Flue gas measuring point*
4. *Heat exchanger*
5. *Front plate heat exchanger*
6. *Air inlet tube*
7. *Gas combination block*
8. *Two channel time clock (optional)*
9. *Control panel*
10. *Pressure gauge*
11. *Circulation pump*
12. *Expansion vessel*
13. *Ignition/ionization electrode*
14. *Stand off frame (optional)*

8.3 Working principle

The Remeha Avanta Plus casing serves as a sealed air box, with air drawn in by the fan. On the outlet side of the fan is a venturi, into which a measured quantity of gas is injected based on the volume of air available. The fan speed control is dependent on the settings of the external control, the advanced boiler controller '**abc®**' and the prevailing temperatures (measured by the temperature sensors).

This method of gas/air ratio control ensures that the gas quantity is precisely adjusted to the air quantity. Thus creating optimum combustion over the whole heat input range. The gas and air is mixed in the venturi and then passes into the specially designed pre-mix burner. After combustion, the hot flue gas is directed through a specially designed, high efficiency helicoil stainless steel heat exchanger with a large surface area, and transfers it's heat to the system water circulating around the coils. In the condensing part of the exchanger the water vapour in the flue gas condenses within it and the heat released during this process (the so-called latent or condensing heat) is also transferred to the system water. The condensate water so formed is discharged from the heat exchanger via a siphon.

In normal operation, the boiler's flue gas discharge will produce a visible white condensing "plume" and therefore care should be taken when choosing a location for the terminal.

Combi boiler operation

The Remeha Avanta Plus 24c, 28c, 35c and 39c are combination boilers with an integral plate heat exchanger providing instant domestic hot water. On opening a hot water tap, detected by a flow sensor, which is located on the cold water inlet side of the heat exchanger detects the demand. This sensor then activates the motorised three-way valve to divert primary flow to the plate heat exchanger which raises the temperature of the cold water supply by a minimum of 35°C to provide domestic hot water. Once the demand for hot water stops the motorised valve automatically returns to the DHW

position. This three-way valve is electrically controlled by the '**abc®**' control and only consumes power when it is changing to a different position.
The plate heat exchanger is protected from debris by two filters one in the cold water supply and one in the primary flow to the diverting valve – Note: the primary flow filter self cleans when the flow reverts back to heating mode.

System boiler operation
The Remeha Avanta Plus 18s, 24s and 30s have the same design and layout as the combi range without the DHW components (three way valve and plate heat exchanger).

8.3.1 Regulating
The Remeha Avanta Plus is a fully modulating boiler and can be regulated using one or more of the following methods;

1. Open Therm – 2 wire interface compatible with the Remeha Celcia 15 room compensator and the Remeha Celcia 20 outside weather compensator or with any other proprietor's OpenTherm® controls.
2. Open Therm thermostat in combination with an external time clock.
3. On/Off room thermostat – volt free (on the X9 terminal block).
4. On/Off room thermostat – 230 V (on the X2 terminal block).
5. 230 V Switching time clock - compatible with the Remeha two channel time clock or with any other proprietor's time clock. For further details see *par. 2.8.*

8.3.2 Advanced boiler control ('abc®'-control)
An intelligent advanced boiler control ('**abc®**') continuously monitors the boiler conditions and ensures a very reliable supply of heat. This control system is adept at dealing with negative influences from the system such as flow reduction, airflow problems and alike. In the event of such influences, the boiler will not go to "lock-out" failure mode, but will in the first instance modulate back, and if necessary, depending on the nature of the circumstances, will temporarily switch off (shut-down or control stop), and then after a short while simply try again.

Provided that the situation is not actually hazardous, the Remeha Avanta Plus will always try to supply heat.
The '**abc®**'- control prevents unnecessary additional call outs.

8.3.3 Regulating the water temperature
The Remeha Avanta Plus is fitted with an electronic temperature regulator with flow and return temperature sensors. The flow temperature can be set to between 20 and 85°C, *see 2.9.8 (factory setting* 75°C) The boiler modulates it's output up and down to match the flow set point from internal or external control. When the boiler is at it's at minimum output and the flow temperature still continues to rise, once the flow set point is exceeded by 5°C the boiler will shut down on a controlled stop (code 8).

8.3.4 *Low flow / water protection*

The Remeha Avanta Plus has a low-water protection based on temperature readings. By modulating down as soon as there is a risk of an insufficient water flow, the boiler will keep working for as long as possible. An insufficient water flow, however caused, - indicated by a flow/return $\Delta t \geq 45°C$ or a rate of rise in the flow temperature > 1°C/sec – will be sensed by the '**abc**®' control which will shut the boiler down in a blocking mode with the display showing (code 9) for 10 minutes and before re-starting.
If there is no water in the boiler or if the pump is not running, it will go to lock out (code E7) and require manual re-set.

8.3.5 *High Limit temperature protection*

If the flow temperature exceeds 110°C the high limit temperature protection device switches off the boiler in a lock out mode with the display showing (code E1) This mode will require a manual re-set.
When the fault is corrected, the boiler can be restarted by pressing the **reset**-key on the control panel and holding for 3 seconds.

9 EFFICIENCY DATA AND GAS EFFICIENCY LABELS

9.1 Annual efficiency

110.5 % in relation to Hi at a load of 30% and a return temperature of 30°C.

9.2 Water-side efficiency

98 % in relation to Hi at full load and an average water temperature of 70°C (80/60°C).
94.3 % in relation to Hi at full load and an average water temperature of 40°C (50/30°C).

spares & parts online IBASIS.CO.UK ©

SERVICE RECORD

It is recommended that your heating system is serviced regularly and that the appropriate Service Record is completed.

Service Provider

Before completing the appropriate Service Record below, please ensure you have carried out the service as described in the manufacturer's instructions.

Always use the manufacturer's specified spare part when replacing controls.

SERVICE 1 Date

Energy Efficiency Checklist completed? Yes ☐ No ☐

Engineer Name

Company Name

Telephone Number

CORGI ID Number

Comments

Signature

SERVICE 2 Date

Energy Efficiency Checklist completed? Yes ☐ No ☐

Engineer Name

Company Name

Telephone Number

CORGI ID Number

Comments

Signature

SERVICE 3 Date

Energy Efficiency Checklist completed? Yes ☐ No ☐

Engineer Name

Company Name

Telephone Number

CORGI ID Number

Comments

Signature

SERVICE 4 Date

Energy Efficiency Checklist completed? Yes ☐ No ☐

Engineer Name

Company Name

Telephone Number

CORGI ID Number

Comments

Signature

SERVICE 5 Date

Energy Efficiency Checklist completed? Yes ☐ No ☐

Engineer Name

Company Name

Telephone Number

CORGI ID Number

Comments

Signature

SERVICE 6 Date

Energy Efficiency Checklist completed? Yes ☐ No ☐

Engineer Name

Company Name

Telephone Number

CORGI ID Number

Comments

Signature

SERVICE 7 Date

Energy Efficiency Checklist completed? Yes ☐ No ☐

Engineer Name

Company Name

Telephone Number

CORGI ID Number

Comments

Signature

SERVICE 8 Date

Energy Efficiency Checklist completed? Yes ☐ No ☐

Engineer Name

Company Name

Telephone Number

CORGI ID Number

Comments

Signature

SERVICE 9 Date

Energy Efficiency Checklist completed? Yes ☐ No ☐

Engineer Name

Company Name

Telephone Number

CORGI ID Number

Comments

Signature

SERVICE 10 Date

Energy Efficiency Checklist completed? Yes ☐ No ☐

Engineer Name

Company Name

Telephone Number

CORGI ID Number

Comments

Signature

spares & parts online IBASIS.CO.UK©

GAS BOILER SYSTEM COMMISSIONING CHECKLIST

This Commissioning Checklist is to be completed in full by the competent person who commissioned the boiler as a means of demonstrating compliance with the appropriate Building Regulations and then handed to the customer to keep for future reference.

Failure to install and commission this equipment to the manufacturer's instructions may invalidate the warranty but does not affect statutory rights.

Customer Name _____ Telephone Number _____

Address _____

Boiler Make and Model _____

Boiler Serial Number ☐☐☐☐☐☐☐☐☐☐☐☐☐☐☐☐☐☐☐☐☐☐☐☐☐☐☐☐☐☐☐☐☐☐☐☐☐☐

Commissioned by *(print name)* _____ CORGI ID Number _____

Company Name _____ Telephone Number _____

Company Address _____

_____ Commissioning Date _____

To be completed by the customer on receipt of a Building Regulations Compliance Certificate*:

Building Regulations Notification Number *(if applicable)* _____

CONTROLS Tick the appropriate boxes

Time and Temperature Control to Heating	Room Thermostat and Programmer/Timer ☐	Programmable Room Thermostat ☐	Load/Weather Compensation ☐	Optimum Start Control ☐
Time and Temperature Control to Hot Water			Cylinder Thermostat and Programmer/Timer ☐	Combination Boiler ☐
Heating Zone Valves			Fitted ☐	Not Required ☐
Hot Water Zone Valves			Fitted ☐	Not Required ☐
Thermostatic Radiator Valves			Fitted ☐	Not Required ☐
Automatic Bypass to System			Fitted ☐	Not Required ☐
Boiler Interlock				Provided ☐

ALL SYSTEMS

The system has been flushed and cleaned in accordance with BS7593 and boiler manufacturer's instructions Yes ☐

What system cleaner was used?

What inhibitor was used? Quantity ☐ *litres*

CENTRAL HEATING MODE Measure and Record:

Gas Rate ☐ m^3/hr OR ☐ ft^3/hr

Burner Operating Pressure (if applicable) ☐ mbar OR Gas Inlet Pressure ☐ mbar

Central Heating Flow Temperature ☐ °C

Central Heating Return Temperature ☐ °C

COMBINATION BOILERS ONLY

Is the installation in a hard water area (above 200ppm)? Yes ☐ No ☐

If yes, has a water scale reducer been fitted? Yes ☐ No ☐

What type of scale reducer has been fitted?

DOMESTIC HOT WATER MODE Measure and Record:

Gas Rate ☐ m^3/hr OR ☐ ft^3/hr

Burner Operating Pressure (at maximum rate) ☐ mbar OR Gas Inlet Pressure (at maximum rate) ☐ mbar

Cold Water Inlet Temperature ☐ °C

Hot water has been checked at all outlets Yes ☐ Temperature ☐ °C

Water Flow Rate ☐ *l/min*

CONDENSING BOILERS ONLY

The condensate drain has been installed in accordance with the manufacturer's instructions and/or BS5546/BS6798 Yes ☐

ALL INSTALLATIONS

If required by the manufacturer, record the following CO_2 ☐ % OR CO ☐ *ppm* OR CO/CO_2 Ratio ☐

The heating and hot water system complies with the appropriate Building Regulations Yes ☐

The boiler and associated products have been installed and commissioned in accordance with the manufacturer's instructions Yes ☐

The operation of the boiler and system controls have been demonstrated to and understood by the customer Yes ☐

The manufacturer's literature, including Benchmark Checklist and Service Record, has been explained and left with the customer Yes ☐

Commissioning Engineer's Signature _____

Customer's Signature _____

(To confirm satisfactory demonstration and receipt of manufacturer's literature)

*All installations in England and Wales must be notified to Local Authority Building Control (LABC) either directly or through a Competent Persons Scheme. A Building Regulations Compliance Certificate will then be issued to the customer.

benchmark COLLECTIVE MARK
THE MARK OF QUALITY FOR THE INSTALLATION, COMMISSIONING AND SERVICING OF DOMESTIC HEATING AND HOT WATER SYSTEMS

©Heating and Hotwater Industry Council (HHIC)

spares & parts online IBASIS.CO.UK©

spares & parts online IBASIS.CO.UK

120577-060309

Broag Ltd.
Remeha House
Molly Millars Lane
RG41 2QP WOKINGHAM,
Berks.

Tel: +44 118 9783434
Fax: +44 118 9786977
Internet: uk.remeha.com
www.avantarange.com
E-mail: boilers@broag-remeha.com

© Copyright
All technical and technological information contained in these technical instructions, as well as any drawings and technical descriptions furnished by us remain our property and may not be multiplied without our prior consent in writing.